PRELIMINARY PLAN APPLICATION
COMPREHENSIVE PERMIT
FOR
SIENA CONDOMINIUMS
PRELIMINARY PLAN APPLICATION
ASSESSOR'S MAP 45, LOTS 10, 11, 12 & 13
MAIN STREET & JURCZYK COURT
in
COVENTRY, RHODE ISLAND

OWNER/APPLICANT:
BOULDER HILL DEVELOPMENT, LLC
PATRICK CZERWIEN, MANAGER
57 PINE RIDGE DRIVE
CRANSTON, RI 02921
PHONE: (401) 413-5648

LEGAL COUNCIL:
MR. THOMAS CRONIN ESQ.
NOLAN, BRUNERO, CRONIN & FERRARA LTD.
1070 MAIN STREET
COVENTRY, RI 02816-5707
PHONE: (401) 828-5800

PERMITTING NOTE:

THE FOLLOWING LOCAL, STATE, FEDERAL AND OTHER PERMITS/ APPROVALS SHALL BE REQUIRED FOR THE PROPOSED PROJECT:

STATE
1. RIDOT PAP: 25-145
2. RIDEM STORMWATER: 002345
3. RIDEM RIPDES (SOIL EROSION): RIR102905
4. RIDEM FRESHWATER WETLANDS: 25-0285

OTHER
1. KENT COUNTY WATER AUTHORITY (KCWA): 09/24/2025
2. COVENTRY SEWER AUTHORITY: 10/14/2025
3. LOCAL FIRE DEPARTMENT APPROVAL: 08/01/2025

PLAN NOTE:

1. ONLY PLANS STAMPED 'ISSUED FOR CONSTRUCTION' AFTER RECEIPT OF LOCAL/STATE APPROVALS SHALL BE USED FOR CONSTRUCTION.

WAIVER REQUEST:

THE FOLLOWING WAIVERS ARE BEING REQUESTED:

MAJOR LAND DEVELOPMENT PROJECT CHECKLIST WAIVERS:
SEVERAL CHECKLIST ITEMS ARE REQUIRED AT THE PRELIMINARY PLAN STAGE, SUCH AS RIDEM AND RIDOT PERMITS. AT THIS TIME, WE ARE REQUESTING THE FOLLOWING LIST OF CHECKLIST WAIVERS LISTED BELOW BE DEFERRED TO THE FINAL PLAN:

1. LINE 57: WETLANDS AND STORMWATER HAVE BEEN SUBMITTED TO RIDEM. PERMITS HAVE NOT BEEN ISSUED AS OF NOVEMBER 6, 2025, SEE APPENDIX-7.
2. LINE 65: WETLANDS AND A PHYSICAL ALTERATION PERMIT APPLICATION HAVE BEEN SUBMITTED. PERMITS HAVE NOT BEEN ISSUED AS OF NOVEMBER 6, 2025, SEE APPENDIX-7.
3. LINE 66: AN APPROVED SOIL EROSION AND SEDIMENT CONTROL PLAN. -SUBMITTED TO TOWN ENGINEER FOR REVIEW AT THIS TIME.

SUBDIVISION AND LAND DEVELOPMENT REGULATION WAIVERS:

1. ARTICLE VIII (E)4: COMMUNICATION LINES (ELECTRIC, TELEPHONE, AND CABLE TV)
ALL ELECTRIC, COMMUNICATION (TELEPHONE, FIRE ALARM AND CABLE TV) AND STREET LIGHTING LINES SHALL BE INSTALLED UNDERGROUND.

PREPARED BY:
COMMONWEALTH
ENGINEERS & CONSULTANTS, INC.
400 SMITH STREET
PROVIDENCE, RHODE ISLAND 02908
(401) 273-6600

DATE: MARCH 27, 2025
REVISION-1: JULY 29, 2025
REVISION-2: JULY 31, 2025
REVISION-3: SEPTEMBER 2, 2025
REVISION-4: SEPTEMBER 11, 2025
REVISION-5: NOVEMBER 7, 2025
REVISION-6: DECEMBER 4, 2025
REVISION-7: DECEMBER 23, 2025
REVISION-8: JANUARY 27, 2026
REVISION-9: MARCH 31, 2026
REVISION-10: APRIL 21, 2026

TIMOTHY J. BEHAN
No. 6278
REGISTERED PROFESSIONAL ENGINEER
04/21/2026

PLAN NOTE:

1. ONLY PLANS STAMPED 'ISSUED FOR CONSTRUCTION' AFTER RECEIPT OF LOCAL/STATE APPROVALS SHALL BE USED FOR CONSTRUCTION.

SITE

LOCUS MAP
SCALE 1" = 500'

SHEET INDEX

1. TITLE SHEET
2. LEGEND, NOTES AND ABBREVIATIONS
3. 500-FOOT RADIUS PLAN
4. EXISTING CONDITIONS PLAN
5. PROPOSED LAYOUT PLAN
6. PROPOSED GRADING PLAN
7. PROPOSED DRAINAGE PLAN
8. PROPOSED UTILITY PLAN
9. PROPOSED ROADWAY PROFILE PLAN-1
10. PROPOSED ROADWAY PROFILE PLAN-2
11. PROPOSED ROOF AND FOUNDATION DRAIN PLAN
12. SOIL EROSION AND SEDIMENT CONTROL PLAN
13. CONSTRUCTION DETAILS-1
14. CONSTRUCTION DETAILS-2
15. CONSTRUCTION DETAILS-3
16. CONSTRUCTION DETAILS-4
17. CONSTRUCTION DETAILS-5
18. CONSTRUCTION DETAILS-6
19. CONSTRUCTION DETAILS-7
20. CONSTRUCTION DETAILS-8
21. "SURVEY PLOT PLAN, AP45, LOTS 10, 11, 12 &13" BY PETER V. CIPOLLA

L-1 LANDSCAPE PLAN
L-2 LANDSCAPE DETAILS PLAN

ZONING CRITERIA:

SUBJECT LOT = A.P. 50 LOTS 10, 11, 12 & 13
AREA = 96,852 S.F. (2.2 AC.+/-)
UPLAND AREA = 96,852 S.F. (2.2 AC.+/-)
ZONE: VCM - VILLAGE MAIN STREET COMMERCIAL
PUBLIC WATER & SEWER PROPOSED
FIRE SERVICE BY CENTRAL FIRE DISTRICT

ZONING REGULATIONS SECTION 255-610 TABLE 6-2

CRITERIA	REQUIRED	PROPOSED
MINIMUM LOT AREA:	7,500 SQ. FT	96,852 SQ. FT.
MINIMUM LOT FRONTAGE	80'	86.8'±
MINIMUM BUILDING HEIGHT:	35'	<35'
MAXIMUM LOT COVERAGE:	60%	39.6%
FRONT SETBACK:	10'	>20'
INTERIOR SIDE SETBACK:	10'	>20'
CORNER SIDE SETBACK:	10'	>20'
REAR SETBACK:	20'	>20'

PROPOSED DENSITY:

16 UNITS ON 2.2 AC. = 7.27 UNITS/ACRE

PARKING CALCULATIONS:

16 UNITS X 2 SPACES/UNIT = 32 REQUIRED

1 SPACE PER GARAGE X 16 GARAGES = 16 SPACES
2 SPACES PER DRIVEWAY X 16 DRIVEWAYS = 32 SPACES
TOTAL SPACES PROVIDED = 48 SPACES > 32 REQUIRED.

IMPERVIOUS CALCULATION:
STREET AND DRIVEWAYS = 19,700 SQ. FT.
2-FAMILY BUILDINGS = 15,392 SQ. FT.
WALKWAYS = 1,600 SQ. FT.
PATIOS = 1,280 SQ. FT.
TOTAL = 37,972 SQ. FT. OR 39.6%

BUILDING COVERAGE:
15,393 / 96,852 = 15.8%

LAND SUITABLE FOR DEVELOPMENT:

WETLANDS:	0 AC.
FLOOD ZONE:	0 AC.
STREETS:	0 AC.
EASEMENTS:	0 AC. (EXISTING EASEMENT TO BE ABANDONED)
STEEP SLOPES:	0 AC.
TOTAL:	0 AC.

PROJECT NO. 25024.00

GENERAL NOTES:

1. THESE PLANS HAVE BEEN ISSUED FOR LOCAL AND/OR STATE AGENCY REVIEW. ONLY PLANS STAMPED 'ISSUED FOR CONSTRUCTION' AFTER RECEIPT OF ALL LOCAL AND STATE APPROVALS SHALL BE USED FOR CONSTRUCTION.
2. SPECIFICATIONS & DETAILS GOVERNING THIS PROJECT ARE THE RHODE ISLAND STANDARD SPECIFICATIONS FOR ROAD & BRIDGE CONSTRUCTION, 2018 EDITION & TOWN OF COVENTRY SUBDIVISION & LAND DEVELOPMENT STANDARDS. THE TOWN'S STANDARDS SHALL OVERRIDE RIDOT STANDARDS OUTSIDE OF STATE R.O.W.'S.
3. THE CONTRACTOR SHALL READ AND FAMILIARIZE ITSELF WITH THE TOWN'S SUBDIVISION & LAND DEVELOPMENT REGULATIONS (AS THEY PERTAIN TO CONSTRUCTION) PRIOR TO CONSTRUCTION.
4. THE CONTRACTOR SHALL CONSTRUCT THE PROPOSED DRIVEWAY AND DRAINAGE SYSTEM IN ACCORDANCE WITH THE TOWN'S SPECIFICATIONS FOR CONSTRUCTION OF REQUIRED IMPROVEMENTS, AS SPECIFIED IN THE TOWN'S SUBDIVISION & LAND DEVELOPMENT REGULATIONS.
5. ANY REQUIRED AUTHORIZATION/PERMITS TO PERFORM WORK NOT PREVIOUSLY SECURED & PROVIDED BY THE OWNER SHALL BE OBTAINED BY THE CONTRACTOR PRIOR TO THE START OF CONSTRUCTION; THE CONTRACTOR SHALL ADHERE TO THE TERMS, CONDITIONS AND REQUIREMENTS OF ALL STATE & LOCAL PERMITS ISSUED FOR THE PROJECT.
6. THE CONTRACTOR SHALL BE SOLELY RESPONSIBLE FOR ANY CONSTRUCTION OPERATIONS, INCLUDING ALL ACTIONS OR OMISSIONS OF ANY SUBCONTRACTORS, AGENTS OR EMPLOYEES. THE CONTRACTOR IS ALSO RESPONSIBLE FOR ALL ASPECTS OF ON–SITE SAFETY, INCLUDING ANY DAMAGE TO EXISTING STRUCTURES.
7. ALL ELEVATIONS ON SUBJECT PROPERTY ARE BASED ON NGVD88 DATUM, AND HAVE A POTENTIAL VERTICAL VARIANCE OF 1± FEET.
8. NO EXISTING DRAINAGE STRUCTURE OR FACILITY SHALL BE ALTERED OR DISTURBED UNLESS SPECIFICALLY INDICATED ON THESE DRAWINGS. ANY DAMAGE TO EXISTING UTILITIES SHALL BE THE CONTRACTOR'S SOLE RESPONSIBILITY TO REPAIR.
9. ALL DISTURBED AREAS/STRUCTURES SHALL BE REPLACED IN–KIND, UNLESS OTHERWISE SHOWN OR AUTHORIZED BY THE TOWN.
10. THE CONTRACTOR SHALL THOROUGHLY EXAMINE THE CONTRACT DOCUMENTS AND PLANS, AND SHALL INSPECT THE SITE. ANY CHANGES TO THE PROJECT, OR THE INSTALLATION OF AN ITEM FOR WHICH NO PARTICULAR DETAIL OR SPECIFICATION WAS PROVIDED, SHALL BE REVIEWED BY, AND MUST BE ACCEPTABLE TO, THE ENGINEER.
11. THE ABSENCE OF PARTICULAR DETAILS OR SPECIFICATIONS FOR WORK CALLED FOR ON THE PLANS SHALL NOT RELIEVE THE CONTRACTOR FROM FURNISHING AND INSTALLING THE PROPOSED WORK.
12. ALL CONSTRUCTION IS SUBJECT TO THE INSPECTION OF AND APPROVAL BY THE TOWN. PROPER NOTIFICATION SHALL BE GIVEN PRIOR TO THE COMMENCEMENT OF ANY WORK, AND NO WORK SHALL PROCEED WITHOUT THE AUTHORIZATION OF THE TOWN.
13. PRIOR TO THE START OF CONSTRUCTION, THE APPROVED LIMIT OF DISTURBANCE SHALL BE LOCATED AND FIELD–DELINEATED BY A RI PLS; NO CLEARING OR DISTURBANCE SHALL TAKE PLACE OUTSIDE THE ESTABLISHED LIMIT AT ANY POINT DURING CONSTRUCTION, UNLESS EXPLICITLY AUTHORIZED BY THE TOWN.
14. PRIOR TO THE START OF EARTH–DISTURBING ACTIVITIES, THE CONTRACTOR SHALL INSTALL ALL SEDIMENT & SOIL EROSION CONTROL (SESC) DEVICES IN ACCORDANCE WITH RIDEM & TOWN STANDARDS.
15. PROPOSED GRADING ON THE SITE IS TO BE USED AS A GUIDE, SUCH THAT THE DEVELOPED AREA IS GRADED TO DRAIN ALL SURFACE RUNOFF. SITE GRADING SHALL BE PERFORMED IN ACCORDANCE WITH THE R.I. STATE BUILDING CODE, LATEST EDITION.
16. COMMUNICATION LINES (ELECTRIC, TELEPHONE, AND CABLE TV) SHALL BE INSTALLED UNDERGROUND, UNLESS OVERHEAD SERVICE IS APPROVED BY THE TOWN.
17. ALL ROOT SYSTEMS, TREES, STUMPS, BUSHES, BOULDERS AND OTHER UNSUITABLE MATERIAL SHALL BE REMOVED AND TRANSPORTED AWAY FROM THE PROJECT SITE, UNLESS ON–SITE DISPOSAL AT AN APPROPRIATE LOCATION (OR LOCATIONS) IS APPROVED BY THE TOWN.
18. MANHOLE AND CATCH BASIN FRAME & COVERS SHALL BE ADJUSTED TO FINISH GRADE WITH RED BRICK AND MORTAR. OTHER TYPES OF BRICK AND/OR PRECAST CONCRETE RINGS ARE NOT ACCEPTABLE. GRATES SHALL BE SET 0.1 FEET BELOW ROAD GRADE. RIM ELEVATIONS SHOWN ON PROFILES ARE APPROXIMATE, ENGINEER TO SPECIFY FINAL RIM ELEVATIONS ON SHOP DRAWINGS. MANHOLES SHALL BE CONSTRUCTED SO AT LEAST TWO COURSES OF BRICKS ARE BENEATH THE FRAME.
19. ALL MANHOLE AND CATCH BASIN FRAME & COVERS SHALL BE ADJUSTED TO THE FIRST COURSE OF PAVEMENT. THE FRAME AND COVERS SHALL BE RE–ADJUSTED IMMEDIATELY PRIOR TO PLACEMENT OF THE SECOND COURSE OF PAVEMENT.
20. ALL DRIVEWAY DRAINAGE SHALL REMAIN ON THE SITE AND SHALL NOT BE DIRECTED OFF SITE. OFF SITE ROADWAY RUNOFF SHALL NOT BE ALLOWED TO ENTER THE SITE. AT THE PROPOSED ENTRANCE A BITUMINOUS BERM SHALL BE CONSTRUCTED TO PREVENT ROADWAY RUNOFF FROM ENTERING THE SITE.
21. PROPOSED ROAD AND DRIVEWAY SIGHT DISTANCE TRIANGLES SHALL BE CLEARED BY THE CONTRACTOR TO THE SATISFACTION OF THE TOWN.
22. ANY SLOPES GREATER THAN 2H:1V SHALL BE STABILIZED WITH RIDOT CLASS R–4 RIP RAP LAID ON TOP OF FILTER FABRIC (MIRAFI 180N OR APPROVED EQUAL). DEPTH OF RIP RAP TO BE 1.5 TIMES MAXIMUM STONE SIZE.
23. ALL HDPE PIPE SHALL BE ADS N–12 INTEGRAL BELL WATER–TIGHT PIPE OR APPROVED EQUAL.

LEGEND

	PARCEL PROPERTY LINE
	ADJACENT PROPERTY LINE
	EXISTING RIGHT OF WAY LINE
40	EXISTING MAJOR CONTOUR
27	EXISTING MINOR CONTOUR
G	EXISTING GAS LINE
W W W	EXISTING WATER LINE
S S	EXISTING SEWER LINE
GG	GAS VALVE BOX
WV	WATER VALVE BOX
	CURB STOP
UP-297	UTILITY POLE AND NUMBER
SMH	EXISTING SEWER MANHOLE
COM-MH	EXISTING COMMUNICATIONS MANHOLE
DMH	DRAINAGE MANHOLE
DI/CB CB	CATCH BASIN OR DROP INLET
X39.50	EXISTING SPOT GRADE
40	PROPOSED CONTOUR LINE
X39.50	PROPOSED SPOT GRADE
	EXISTING GUARD RAIL
W W W	PROPOSED WATER LINE
S S	PROPOSED SEWER LINE
	BUILDING SETBACK LINE
	FIRE HYDRANT
MW	MONITORING WELL
	EX. CHAIN LINK FENCE (HEIGHT VARIES)
	PROPOSED CHAIN LINK FENCE
	PERIMETER EROSION CONTROLS (COMPOST FILTER SOCK)
TH-5	TEST HOLE LOCATION
BWV	BACKWATER VALVE
CO	CLEANOUT
FD	PROPOSED ROOF DRAIN (RD)
RD	PROPOSED FOUNDATION DRAIN (FD)

ABBREVIATIONS

APPROX	APPROXIMATE
BIT	BITUMINOUS
BOT	BOTTOM
CB	CATCH BASIN
CEM	CEMENT
CF	CUBIC FEET
CFS	CUBIC FEET PER SECOND
CL	CENTERLINE
CL##	PRESSURE RATING CLASS
CLDI	CEMENT–LINED DUCTILE IRON
CONC	CONCRETE
CPP	CORRUGATED PLASTIC PIPE
CY	CUBIC YARD
DG	DOUBLE–GRATE
DMH	DRAIN MANHOLE
ELEV	ELEVATION
EX	EXISTING
ESHGWT	ESTIMATED SEASONAL HIGH GROUNDWATER TABLE
GWT	GROUNDWATER TABLE
GG	GAS GATE VALVE
HDPE	HIGH–DENSITY POLYETHYLENE
HMA	HOT MIX ASPHALT
INV	INVERT
L	LENGTH
LOD	LIMIT OF DISTURBANCE
LT	LEFT
MAX	MAXIMUM
MCU	MODULAR CONCRETE UNIT
MIN	MINIMUM
PROP	PROPOSED
PVC	POLY–VINYL CHLORIDE
PSI	POUNDS PER SQUARE INCH (PRESSURE RATING)
PC	POINT OF CURVATURE
PT	POINT/POINT OF TANGENCY
PVI	POINT OF VERTICAL INFLECTION
R&D	REMOVE & DISPOSE
R&R	REMOVE & RESET
R&S	REMOVE & STOCKPILE
RCP	REINFORCED CONCRETE PIPE
RT	RIGHT
SCH	SCHEDULE (PIPES)
SDR	STANDARD DIMENSION RATIO
SED	SEDIMENT
SESC	SOIL EROSION & SEDIMENTATION CONTROL
SEV	SOIL EVALUATION
SF	SQUARE FEET
SG	SINGLE–GRATE
SMH	SEWER MANHOLE
SS	STAINLESS STEEL
STA	STATION
SY	SQUARE YARD
TEMP	TEMPORARY
TH	TEST HOLE
VERT	VERTICAL
W	WIDTH
WF	WETLAND FLAG
WQ	WATER QUALITY
YR	YEAR
'	FEET
"	INCHES
'/'	VERTICAL FEET/HORIZONTAL FOOT

CONSTRUCTION NOTES:

1. DEVELOPER SHALL RETAIN THE SERVICES OF A RHODE ISLAND PROFESSIONAL ENGINEER TO REVIEW AND APPROVE SHOP DRAWINGS, SAMPLES, AND OTHER SUBMITTALS OF THE CONTRACTOR FOR CONFORMANCE WITH THE DESIGN CONCEPT (THIS PLAN SET) AND TOWN REGULATIONS, WHICH INCLUDE (BUT ARE NOT LIMITED TO) THE FOLLOWING:
   A. DRAINAGE SYSTEM SHOP DRAWINGS/SKETCHES FOR PIPE, PIPE JOINTS, PIPE BEDDING/BACKFILL MATERIALS (SIEVE ANALYSIS, ETC.), COMPACTION METHODS, MANHOLE STRUCTURES, FRAME & COVERS, FRAME & GRATES, FRAME & COVER ADJUSTMENT METHODS TO FINISH GRADE, PROPOSED RIM ELEVATIONS, PIPE INVERTS AND PIPE DIAMETERS. ANY SUBSTANTIAL CHANGES TO THE DESIGN CONCEPT SHALL BE BROUGHT TO THE TOWN'S ATTENTION.
   B. ROADWAY CONSTRUCTION SHOP DRAWINGS/SKETCHES FOR GRAVEL BASE MATERIALS, BITUMINOUS CONCRETE COURSES, SIGNAGE/STRIPING, UNDERDRAINS, GUARDRAILS, RETAINING WALLS AND CURBING/BERMS.
   C. SOIL EROSION CONTROL AND DEWATERING METHODS.
   D. COMPACTION METHODS FOR INSTALLING PIPE/MANHOLES, GRAVEL ROAD BASE AND BITUMINOUS CONCRETE COURSES.
   E. TESTING METHODS AND TESTING FREQUENCY FOR DRAINAGE AND ROAD SYSTEMS. TESTING FREQUENCY SHALL BE IN ACCORDANCE WITH RIDOT AND TYPICAL ENGINEERING STANDARDS.
2. THE SHOP DRAWING SUBMITTAL PACKAGE SHALL BE STAMPED BY A RHODE ISLAND PROFESSIONAL ENGINEER AND SUBMITTED TO THE TOWN/TOWN ENGINEER FOR REVIEW AND APPROVAL. SHOP DRAWING RECORDS SHALL BE MAINTAINED FOR THE DURATION OF THE PROJECT, INCLUDING THE WARRANTY PERIOD.
3. MARKED–UP CONSTRUCTION DRAWINGS SHALL BE MAINTAINED AND KEPT AT THE JOB SITE FOR THE DURATION OF THE PROJECT.
4. CONTRACTOR SHALL PREPARE AND SUBMIT AS–BUILT DRAWINGS IN ACCORDANCE WITH TOWN REGULATIONS AND KENT COUNTY WATER AUTHORITY REQUIREMENTS. AS–BUILT DRAWING SHALL COMPLY WITH KENT COUNTY WATER AUTHORITY RULES AND REGULATIONS. AS–BUILTS SHALL BE STAMPED BY A R.I. PROFESSIONAL LAND SURVEYOR AND R.I. PROFESSIONAL ENGINEER.
5. PRIOR TO ACCEPTANCE OF INFRASTRUCTURE, A RI P.E. SHALL CERTIFY THE INFRASTRUCTURE WAS INSTALLED IN ACCORDANCE WITH THE DESIGN INTENT AND MEETS RIDOT/TOWN STANDARDS & PERMIT STIPULATIONS, AND IS READY FOR USE. AS–BUILT DRAWING SHALL COMPLY WITH KENT COUNTY WATER RULES AND REGULATIONS AND BE ACCEPTED AND APPROVED BY THE KENT COUNTY WATER AUTHORITY.

SUBSURFACE CONDITIONS NOTES:

1. ALL SOIL AND TEST HOLE DATA, WATER TABLE ELEVATIONS, AND SOIL ANALYSIS SHOWN/REFERENCED ON THE DRAWINGS OR INCLUDED IN THE SPECIFICATIONS APPLY ONLY AT THE LOCATION OF THE TEST HOLES AND TO THE DEPTHS INDICATED. SOIL TEST REPORTS ARE AVAILABLE FOR INSPECTION AT THE OFFICE OF THE DESIGN ENGINEER. ANY ADDITIONAL SUBSURFACE EXPLORATION SHALL BE DONE BY THE CONTRACTOR AT THEIR OWN EXPENSE. IT IS UNDERSTOOD THAT THE MAKING OF THE DEDUCTIONS, INTERPRETATIONS AND CONCLUSIONS FROM ALL THE ACCESSIBLE FACTUAL INFORMATION, INCLUDING THE NATURE OF THE MATERIALS TO BE EXCAVATED, THE DIFFICULTIES OF MAKING AND MAINTAINING THE REQUIRED EXCAVATIONS, AND THE DIFFICULTIES OF DOING OTHER WORK AFFECTED BY THE GEOLOGY AND OTHER SUBSURFACE CONDITIONS AT THE SITE OF THE WORK, ARE THE CONTRACTOR'S SOLE RESPONSIBILITY.
2. THE INDICATED ELEVATION OF THE WATER TABLE IS THAT EXISTING AT THE DATE THE TEST HOLE DATA WAS DETERMINED. IT IS THE CONTRACTOR'S RESPONSIBILITY TO DETERMINE AND ALLOW FOR THE ELEVATION OF GROUNDWATER AT THE DATE OF PROJECT CONSTRUCTION. A DIFFERENCE IN ELEVATION BETWEEN GROUNDWATER SHOWN IN SOIL LOGS AND GROUNDWATER ACTUALLY ENCOUNTERED DURING CONSTRUCTION WILL NOT BE CONSIDERED AS A BASIS FOR EXTRA WORK.

SITE NOTES:

1. WHERE REFERENCED HEREIN, THE TERM "PARCEL" SHALL BE APPLICABLE TO THE COMBINED LAND AREA ENCOMPASSED BY LOTS 10, 11, 12 & 13. ALL LOCATED ON ASSESSORS MAP 45.
2. THE SUBJECT PARCEL LIES WITHIN 'ZONE X–AREAS OF MINIMAL FLOOD HAZARD' AS DELINEATED ON THE FIRM FLOOD INSURANCE RATE MAP FOR KENT COUNTY, RHODE ISLAND (ALL JURISDICTIONS), MAP NUMBER 44003C0104H, EFFECTIVE DATE OCTOBER 2, 2015.
3. SUBJECT PARCELS ARE DEVELOPED WITH RESIDENTIAL DWELLINGS. GROUND COVERAGE IS LAWN WITH MIXED HARDWOOD SPECIES TREES ON THE PERIMETER OF THE SITE.
4. THERE IS AN OFF SITE CEMETERY (AP 45 LOT 6) LOCATED AT THE WEST SIDE OF KEN RAY DRIVE ALONG MAIN STREET.
5. AS SHOWN ON THE RIDEM ENVIRONMENTAL RESOURCE MAP AND TOWN OF COVENTRY GIS, THE SUBJECT PARCEL IS NOT LOCATED WITHIN EITHER OF THE FOLLOWING:
   - HISTORIC DISTRICT
   - COMMUNITY OR NON–COMMUNITY WELL HEAD PROTECTION AREA
   - RIDEM GROUNDWATER RESERVOIR, RECHARGE AREA OR SOLE SOURCE AQUIFER
6. THE SITE IS NOT LOCATED IN A NATURAL HERITAGE AREA .
7. SUBJECT PARCEL IS SERVICED BY KENT COUNTY WATER AUTHORITY.
8. SUBJECT PARCEL IS SERVICED BY COVENTRY SEWER AUTHORITY.
9. GROUNDWATER IN THE AREA IS CLASSIFIED GB BY RIDEM.
10. THE SOILS IN THE AREA ARE CLASSIFIED Ur–URBAN LAND AND Nab NARRAGANSETT SILT LOAM.
11. EXISTING OVERHEAD UTILITIES ARE LOCATED ALONG THE NORTH SIDE OF MAIN STREET.
12. THE SUBJECT PARCEL IS SERVICED BY THE CENTRAL FIRE DISTRICT.

MAP NOTES:

1. PROPERTY LINES DEPICTED ON THE PLAN ARE BASED SURVEY BY PETER V. CIPOLLA, JR ENTITLED "SURVEY PLOT PLAN, AP. 45 LOTS 10, 11, 12 & 13, COVENTRY RHODE ISLAND", DATED APRIL 28, 2025.
2. THE LOCATION OF UNDERGROUND UTILITIES IS APPROXIMATE.
3. CONTRACTORS TO VERIFY THE LOCATION OF UNDERGROUND UTILITIES PRIOR TO ANY EXCAVATION, DIGGING, BORING, OR TESTING (CALL DIGSAFE).
4. UTILITIES SHOWN ARE QUALITY LEVEL D OF THE ASCE 38–02 STANDARDS.
5. GAS MAINS LOCATIONS FROM PLANS OF RECORD. GAS LOCATIONS (IF ANY) ARE APPROXIMATE AND MUST BE FIELD VERIFIED PRIOR TO EXCAVATION.
6. EXISTING SEWER LINES WERE TAKEN FROM TOWN OF COVENTRY GIS.
7. DEPICTED DWELLINGS, ROADWAYS AND DRIVEWAYS ON THIS PLAN WERE TAKEN FROM TOWN OF COVENTRY GIS.
8. EXISTING OVERHEAD UTILITIES WERE TAKEN FROM STREET OBSERVATIONS.
9. EXISTING WATER LINE IS BASED UPON KENT COUNTY WATER AUTHORITY RECORDS.
10. NORTH ARROW ORIENTATION IS BASED UPON SURVEY BY PETER V. CIPOLLA, JR ENTITLED "SURVEY PLOT PLAN, AP. 45 LOTS 10, 11, 12 & 13, COVENTRY RHODE ISLAND", DATED APRIL 28, 2025.
11. TOPOGRAPHY FOR 500–FOOT RADIUS TAKEN FROM NOAA 2022 LIDAR.

EXISTING CONDITIONS/UTILITIES NOTES:

1. THE CONTRACTOR SHALL VERIFY THE LOCATIONS OF ALL EXISTING DRAINAGE AND UTILITIES, BOTH UNDERGROUND AND OVERHEAD BEFORE EXCAVATION BEGINS IN ACCORDANCE WITH 'DIG SAFE'. NO DRAINAGE STRUCTURE OR FACILITY SHALL BE DISTURBED WITHOUT PROPER PERMITS UNLESS SPECIFICALLY INDICATED ON THESE DRAWINGS. ANY DAMAGE TO EXISTING UTILITIES SHALL BE THE CONTRACTOR'S RESPONSIBILITY.
2. ALL EXISTING UTILITIES HAVE BEEN PLOTTED BASED UPON THE BEST INFORMATION AVAILABLE AT THE TIME OF PLAN PREPARATION AND REPRESENT APPROXIMATE LOCATIONS. SOME OBSTRUCTIONS, OBSTACLES, OR DIFFICULTIES IN THE PATH OF THE WORK, EITHER ANTICIPATED OR DISCOVERED IN THE PERFORMANCE OF THE WORK, MAY NOT HAVE BEEN INDICATED BY DRAWINGS. THE CONTRACTOR SHALL BE UNDERSTOOD TO HAVE ENTERED INTO THE CONTRACT WITH FULL KNOWLEDGE THAT IN ANY WORK INVOLVING EXCAVATION OPERATIONS IN PUBLIC HIGHWAYS OR ADJACENT TO OTHER DEVELOPMENTS, SOME UNFORESEEN OBSTACLES, DIFFICULTIES, SOIL OR GROUND WATER CONDITIONS, ETC., MAY BE ENCOUNTERED, AND THAT THE CONTRACTOR HAS INCLUDED IN HIS BID AND CONTRACT OBLIGATIONS THE ASSUMPTIONS OF THE RISKS AND COSTS TO WHICH SUCH OBSTACLES, ETC. MAY SUBJECT HIM/HER.
3. THE LOCATION OF EXISTING UNDERGROUND PIPES, CONDUITS, AND STRUCTURES AS SHOWN HAS BEEN COLLECTED FROM THE BEST AVAILABLE SOURCES, AND THE OWNER, TOGETHER WITH HIS AGENTS, DOES NOT IMPLY OR GUARANTEE THE DATA AND INFORMATION IN CONNECTION WITH UNDERGROUND PIPES, CONDUITS, STRUCTURES, AND SUCH OTHER PARTS, AS TO THEIR COMPLETENESS, NOR THEIR LOCATIONS AS INDICATED. THE CONTRACTOR SHALL ASSUME THAT THERE ARE EXISTING WATER, GAS AND OTHER UTILITY CONNECTIONS IN ROUTE, WHETHER THEY APPEAR ON THE DRAWINGS OR NOT. ANY EXPENSE AND/OR DELAY OCCASIONED BY UTILITIES AND STRUCTURES OR DAMAGE THERETO, INCLUDING THOSE NOT SHOWN, SHALL BE THE RESPONSIBILITY OF THE CONTRACTOR, AT NO ADDITIONAL EXPENSE TO THE OWNER.
4. BEFORE PROCEEDING WITH CONSTRUCTION OPERATIONS, THE CONTRACTOR SHALL MAKE SUCH SUPPLEMENTAL INVESTIGATIONS, INCLUDING EXPLORATORY EXCAVATIONS BY HAND DIGGING, AS HE DEEMS NECESSARY TO UNCOVER AND DETERMINE THE EXACT LOCATIONS OF UTILITIES AND STRUCTURES AND SHALL HAVE NO CLAIMS FOR DAMAGES DUE TO ENCOUNTERING SUBSURFACE STRUCTURES OR UTILITIES IN LOCATIONS OTHER THAN THOSE SHOWN ON THE DRAWINGS, OR WHICH ARE MADE KNOWN TO THE CONTRACTOR PRIOR TO CONSTRUCTION OPERATIONS. THE CONTRACTOR SHALL BE RESPONSIBLE AND LIABLE FOR ALL DAMAGES TO EXISTING UTILITIES AND STRUCTURES.
5. PRIOR TO CONSTRUCTION THE CONTRACTOR SHALL ENGAGE A RI PROFESSIONAL LAND SURVEYOR TO SET AND VERIFY ALL LINES AND GRADES. ALL EXISTING AND PROPOSED UTILITY LOCATIONS AND ELEVATIONS ARE TO BE CONFIRMED BY THE CONTRACTOR PRIOR TO CONSTRUCTION. ANY ITEM FOUND WHICH DOES NOT MATCH THE PLANS MUST BE BROUGHT TO THE ENGINEER'S ATTENTION PRIOR TO CONSTRUCTION FOR REVIEW.
6. ANY DAMAGE TO EXISTING PAVEMENT, BRIDGES, CONDUIT, SIDEWALK, FENCES, ETC., CAUSED BY THE CONTRACTOR SHALL BE REPAIRED BY THE CONTRACTOR AT NO ADDITIONAL COST TO THE OWNER/STATE/TOWN.
7. WHENEVER IT MAY BE NECESSARY TO CROSS OR INTERFERE WITH EXISTING CULVERTS, DRAINS, SEWERS, WATER PIPES, FIXTURES, GUARDRAILS, FENCES, GAS PIPES, OR OTHER STRUCTURES NEEDING SPECIAL CARE, DUE NOTICE SHALL BE GIVEN TO THE OWNER. WHENEVER REQUIRED, ALL OBJECTS SHALL BE STRENGTHENED TO MEET ANY ADDITIONAL STRESS THAT THE WORK HEREIN SPECIFIED MAY IMPOSE UPON IT, AND ANY DAMAGE CAUSED SHALL BE THOROUGHLY REPAIRED. THE ENTIRE WORK SHALL BE PERFORMED AT NO EXPENSE TO THE OWNER. THE CONTRACTOR SHALL BE RESPONSIBLE FOR ALL BROKEN MAINS OR UTILITIES ENCOUNTERED DURING THE PROGRESS OF THE WORK AND SHALL REPAIR AND BE RESPONSIBLE FOR CORRECTING ALL DAMAGES TO EXISTING UTILITIES, STRUCTURES AND PERSONAL "PROPERTY" WHICH MAY HAVE BEEN CAUSED BY BROKEN LINES AT NO ADDITIONAL COST TO THE OWNER. THE CONTRACTOR SHALL CONTACT THE PROPER UTILITY OR AUTHORITY TO CORRECT OR MAKE ANY CHANGES DUE TO UTILITIES OR OTHER OBSTRUCTIONS DURING CONSTRUCTION, BUT THE ENTIRE RESPONSIBILITY AND EXPENSE SHALL BE WITH THE CONTRACTOR. ALL DAMAGED ITEMS OF WORK OR ITEMS REQUIRED TO BE REMOVED AND REPLACED DUE TO CONSTRUCTION SHALL BE REPLACED OR REPAIRED BY THE CONTRACTOR TO THE COMPLETE SATISFACTION OF THE OWNER, AND AT NO ADDITIONAL EXPENSE TO THE OWNER.

DEMOLITION NOTES:

THE SITE IS CURRENTLY VACANT AND UTILITIES ARE ASSUMED ACTIVE. THE PROPERTY CURRENTLY CONTAINS FIVE (5) HOUSES, A GARAGE AND SEVERAL OUTBUILDING THAT ARE TO BE REMOVED AND BE DISPOSED OF IN A LEGAL MANNER. THE CONTRACTOR SHALL CONTACT 'DIGSAFE' AT 1–888–344–7233 AT LEAST 72 HOURS PRIOR TO ANY DEMOLITION, EXCAVATION OR CONSTRUCTION.

DEMOLITION AT THE SITE WILL INCLUDE:

1. CONTRACTOR SHALL BE RESPONSIBLE FOR THE COORDINATION AND OBTAINING ANY PERMITS REQUIRED FOR ALL DEMOLITION.
2. REMOVE EXISTING UTILITIES AND CAP/CLOSE OUT PER UTILITY OWNERS SPECIFICATION. CONTRACTOR TO COORDINATE WITH UTILITY OWNERS AND SHALL BE RESPONSIBLE TO OBTAIN ANY PERMITS REQUIRED.
3. EXISTING UTILITIES LOCATIONS SHOWN ARE APPROXIMATE AND ADDITIONAL UTILITIES MAY BE PRESENT.
4. EXISTING SITE IMPROVEMENTS INCLUDING CURBS, PAVER STONES, TREES AND DEBRIS TO BE REMOVED AND LEGALLY DISPOSED.
5. CONTRACTOR SHALL COORDINATE ANY DEMOLITION IN THE RIDOT AND/OR TON OF COVENTRY R.O.W. AND SHALL BE RESPONSIBLE FOR ANY PERMITS REQUIRED.
6. CONTRACTOR TO COORDINATE REMOVAL OF ANY FENCES LOCATED ALONG OR NEAR THE PROPERTY LINE WITH THE ABUTTING OWNER (IF ANY).
7. ANY EXISTING OWTS ENCOUNTERED SHALL BE CLOSE PER RIDEM OWTS REGULATIONS. ANY OWTS COMPONENTS REMOVED SHALL BE DISPOSED OF IN A LEGAL MANNER.
8. ALL MATERIALS REMOVED FROM THE SITE SHALL BE DISPOSED OF IN A LEGAL MANNER.
9. ANY REMAINING FOUNDATIONS FROM PREVIOUS BUILDINGS SHALL BE REMOVED AND BE DISPOSED OF IN A LEGAL MANNER.

RIDOT R.O.W. NOTES:

1. ALL WORK TO BE PERFORMED WITHIN THE STATE HIGHWAY RIGHT OF WAY (R.O.W.) SHALL CONFORM TO THE RHODE ISLAND STANDARD SPECIFICATIONS FOR ROAD AND BRIDGE CONSTRUCTION, AUGUST 2025 EDITION WITH ALL REVISIONS. STANDARD DETAILS FOR THIS WORK ARE R.I. STANDARD DETAILS 1998 EDITION (AMENDED FEBRUARY 2025) WITH ALL REVISIONS.
2. ALL TRAFFIC CONTROL SHALL CONFORM TO THE MANUAL ON UNIFORM TRAFFIC CONTROL DEVICES 2013, INCLUDING ALL REVISIONS.
3. CONTRACTOR MUST SUBMIT AN APPLICATION AND APPLY FOR SEPARATE UTILITY PERMIT FOR ALL UTILITY WORK TO BE PERFORMED IN THE RIDOT R.O.W.. THE APPROVAL OF THE PAPA IS NOT A SUBSTITUTE FOR A UTILITY PERMIT AND APPROVAL OF THE PAPA DOES NOT CONSTITUTE APPROVAL OF ANY UTILITY WORK, SHOWN OR UNSHOWN, WITHIN THE STATE R.O.W..

MAINTENANCE AND PROTECTION OF TRAFFIC NOTES:

1. THE CONTRACTOR SHALL BE RESPONSIBLE FOR MAINTENANCE AND PROTECTION OF PEDESTRIAN AND VEHICULAR TRAFFIC DURING CONSTRUCTION, INCLUDING POLICE PROTECTION. ALL TEMPORARY AND VEHICULAR SIGNS, BARRICADES AND LANE CLOSURES SHALL BE IN CONFORMANCE WITH THE MAY 2012 MANUAL OF UNIFORM TRAFFIC CONTROL DEVICES (MUTCD), INCLUDING ALL SUBSEQUENT REVISIONS.
2. TEMPORARY CONSTRUCTION SIGNS AND ALL APPLICABLE TRAFFIC CONTROL DEVICES SHALL BE IN PLACE PRIOR TO THE START OF WORK IN ANY AREA OPEN TO TRAFFIC.
3. THE PRIVATE VEHICLES OF CONSTRUCTION WORKERS WILL NOT BE PARKED IN THE STREET RIGHT–OF–WAYS.
4. SIGN MOUNTINGS SHALL BE IN ACCORDANCE WITH R.I.D.O.T. SPECIFICATIONS FOR TEMPORARY CONSTRUCTION SIGNS.

EARTHWORK NOTES:

1. SPECIFICATIONS & DETAILS TO GOVERN THIS PROJECT ARE THE RHODE ISLAND STANDARD SPECIFICATIONS FOR ROAD & BRIDGE CONSTRUCTION – AUGUST 2018 EDITION (INCLUDING ALL SUBSEQUENT ADDENDA) AS WELL AS TOWN STANDARDS; WHERE APPLICABLE, THE TOWN'S STANDARDS SHALL OVERRIDE RIDOT STANDARDS.
2. RIDOT STANDARDS ARE AVAILABLE FOR DOWNLOAD FROM THE RIDOT WEBSITE UNDER 'STANDARDS AND SPECIFICATIONS' (WWW.DOT.STATE.RI.US/ENGINEERING/STANDARDS/INDEX.ASP). TOWN STANDARDS ARE AVAILABLE FOR DOWNLOAD FROM THE TOWN OF COVENTRY WEBSITE UNDER THE LINK 'PLANNING DEPARTMENT,' 'SUBDIVISION REGULATIONS' (WWW.WGTOWNRI.ORG/DEPARTMENTS/PLANNING/SUBDIVISION.PHP).
3. EMBANKMENT SLOPES AND ALL DISTURBED AREAS ARE TO RECEIVE 4" OF TOPSOIL AND GRASS SEED UNLESS OTHERWISE NOTED.
4. ALL EXCAVATION AND PLACEMENT OF FILL SHALL BE IN ACCORDANCE WITH R.I.D.O.T. STANDARD SPECIFICATIONS SECTION 202 AND TOWN SUBDIVISION AND LAND DEVELOPMENT REGULATIONS. ALL MATERIALS AND METHODS SHALL BE PERFORMED IN ACCORDANCE WITH THESE STANDARDS AND SPECIFICATIONS. ALL FILL BENEATH PAVEMENTS SHALL BE GRAVEL AS DEFINED IN THE RIDOT SPECIFICATIONS.
5. ALL AREAS COMPACTED BY CONSTRUCTION ACTIVITIES (OTHER THAN ROADWAYS AND BENEATH STRUCTURES) SHALL BE RESTORED TO PROMOTE INFILTRATION BY TILLING THE TOP 12 INCHES OF SOIL PRIOR TO FINAL STABILIZATION.
6. ALL UNSUITABLE MATERIAL (LOAM, SUBSOIL, ROOTS, TREE TRUNKS, CLAY, SILT, ORGANIC MATTER, LARGE STONES, ETC.) SHALL BE REMOVED FROM THE ROADWAY SUBGRADE AND EMBANKMENT AREAS PRIOR TO THE PLACEMENT OF THE GRAVEL SUBBASE/BERM MATERIAL AS DIRECTED AND APPROVED.
7. SUITABLE SURPLUS MATERIAL GENERATED BY EXCAVATIONS WITHIN THE PROJECT AREA (SAND, GRAVEL, LOAM, ETC.) SHALL BE RE–USED, TO THE EXTENT POSSIBLE, IN OTHER LOCATIONS WITHIN THE PROJECT AREA; MINING OF SITE MATERIALS (I.E. REMOVAL OF SUITABLE IN–SITU MATERIALS FROM THE SITE AND REPLACEMENT WITH IMPORTED BORROW MATERIALS) SHALL NOT BE PERMITTED.

GROUNDWATER REMOVAL & PROTECTION FROM FLOODING:

1. SOME EXCAVATIONS FOR PIPELINES, STRUCTURES, AND APPURTENANT WORK REQUIRED MAY OCCUR BELOW EXISTING GROUNDWATER LEVELS.
2. THE CONTRACTOR SHALL CONSTRUCT AND MAINTAIN ALL PUMPS, DRAINS, WELL POINTS AND/OR ANY OTHER FACILITIES FOR THE CONTROL, COLLECTION, AND DISPOSAL OF GROUNDWATER OR SURFACE AND SUBSURFACE WATER ENCOUNTERED IN THE PERFORMANCE OF THE WORK, AND SHALL PROVIDE ALL PUMPS, PIPING, AND DITCHING FOR THE REMOVAL OF WATER FROM THE TRENCHES AND EXCAVATIONS SO THAT ALL TRENCHES AND EXCAVATIONS MAY BE KEPT FREE FROM WATER AT ALL TIMES, AND SO THAT THE WORK MAY BE PERFORMED IN THE DRY.
3. DEWATERING OF EXCAVATIONS SHALL BE ACCOMPLISHED BY METHODS THAT HAVE BEEN APPROVED PRIOR TO COMMENCEMENT OF WORK BY THE ENGINEER, AND WHICH HAVE A BACKGROUND OF SUCCESSFUL DEWATERING OF EXCAVATIONS OF THE TYPE TO BE EMPLOYED FOR THE WORK.
4. PUMPING SHALL BE CONTINUOUS WHERE DIRECTED AND/OR AS NECESSARY TO PROTECT THE WORK, AND TO MAINTAIN SATISFACTORY PROGRESS OF SAME.
5. THE CONTRACTOR'S DEWATERING AND PUMPING OPERATIONS SHALL BE CARRIED OUT IN SUCH A MANNER THAT NO LOSS OF GROUND WILL RESULT FROM THESE OPERATIONS. ANY DAMAGE TO EXISTING FEATURES OR TO THE CONTRACT WORK RESULTING FROM THE CONTRACTOR'S DEWATERING OPERATIONS SHALL BE REPAIRED BY THE CONTRACTOR, AS DIRECTED BY THE OWNER, AT NO ADDITIONAL EXPENSE TO THE OWNER. PRECAUTIONS SHALL BE TAKEN TO PROTECT NEW AND EXISTING WORK FROM FLOODING OR DAMAGE DURING STORMS OR OTHER CAUSES.
6. ALL PIPELINES OR STRUCTURES NOT STABLE AGAINST UPLIFT DURING CONSTRUCTION OR PRIOR TO COMPLETION SHALL BE THOROUGHLY BRACED OR OTHERWISE PROTECTED.
7. WATER FROM THE TRENCHES, EXCAVATIONS, AND DRAINAGE OPERATIONS SHALL BE DISPOSED OF IN SUCH A MANNER AS WILL CAUSE NEITHER INJURY TO PUBLIC HEALTH OR PRIVATE PROPERTY, NOR DAMAGE TO THE WORK COMPLETED OR IN PROGRESS.
8. THE CONTRACTOR SHALL CONSTRUCT DITCHES, ESTABLISH GRADING, AND PERFORM ANY AND ALL OTHER WORK AS MAY BE NECESSARY TO DIVERT AND PREVENT SURFACE WATER AND WATER FROM DEWATERING OPERATIONS FROM ENTERING EXCAVATION AND WORK AREAS.

STORMWATER SYSTEM OPERATION & MAINTENANCE NOTES:

1. INSPECTIONS AND PROPER MAINTENANCE ARE ESSENTIAL FOR THE LONGEVITY OF THE DRAINAGE SYSTEMS. THE DRAINAGE SYSTEM SHALL BE INSPECTED IN ACCORDANCE WITH THE OPERATION AND MAINTENANCE (O&M) PLAN PREPARED SPECIFICALLY FOR THIS DEVELOPMENT.
2. THE PROPERTY OWNER SHALL MAINTAIN ALL ELEMENTS OF THE PROPOSED DRAINAGE SYSTEM (CATCH BASINS, DRAINAGE MANHOLES, DRAINAGE PIPING, ADS STORMWATER INFILTRATION/STORAGE AREA, SEDIMENT FOREBAY AND INFILTRATION PONDS. A LEGALLY BINDING AND ENFORCEABLE MAINTENANCE AGREEMENT SHALL BE EXECUTED BETWEEN THE OWNER AND A MAINTENANCE COMPANY TRAINED AND EXPERIENCED WITH THE MAINTENANCE REQUIREMENTS DETAILED IN THE O&M PLAN FOR THIS DEVELOPMENT, AS WELL AS THE 'RHODE ISLAND STORMWATER DESIGN AND INSTALLATION STANDARDS MANUAL,' LATEST EDITION (KNOWN AS THE 'MANUAL').

OWNER:/APPLICANT:
BOULDER HILL DEVELOPMENT, LLC
PATRICK CZERWIEN, MANAGER
57 PINE RIDGE DRIVE
CRANSTON, RI 02921
PHONE: (401) 413–5648

LEGAL COUNCIL:
MR. THOMAS CRONIN ESQ.
NOLAN, BRUNERO, CRONIN & FERRARA LTD.
1070 MAIN STREET
COVENTRY, RI 02816–5707
PHONE: (401) 828–5800

DRAWING ISSUE:

- [ ] CONCEPT
- [ ] CUSTOMER APPROVAL
- [x] PERMITTING
- [ ] CONSTRUCTION
- [ ] AS–BUILT
- [ ] OTHER:

ONLY PLANS ISSUED FOR CONSTRUCTION SHALL BE USED FOR CONSTRUCTION

TIMOTHY J. BEHAN
STATE OF RHODE ISLAND
No 6278
HOPE
REGISTERED PROFESSIONAL ENGINEER
04/21/2026

REVISIONS

No.	DATE	DRWN	CHKD
1	07–29–25	SMA	TJB
2	07–31–25	SMA	TJB
3	09–02–25	SMA	TJB
4	09–11–25	SMA	TJB
5	11–07–25	SMA	TJB
6	12–04–25	SMA	TJB
7	12–24–25	SMA	TJB
8	01–27–26	SMA	TJB
9	03–31–26	SMA	TJB
10	04–21–26	SMA	TJB

COMMONWEALTH
ENGINEERS & CONSULTANTS, INC.
400 SMITH STREET
PROVIDENCE, RHODE ISLAND 02908
(401) 273–6600

PRELIMINARY PLAN APPLICATION
COMPREHENSIVE PERMIT
FOR
SIENA CONDOMINIUMS
A.P. 45 LOTS 10, 11, 12 & 13
MAIN STREET
COVENTRY, RHODE ISLAND

LEGEND, NOTES & ABBREVIATIONS

SCALE: AS SHOWN	SHEET NO: 2 OF 20
DRAWN BY: SMA	DESIGN BY: SMA
CHECKED BY: TJB	
DATE: MARCH 27, 2025	PROJECT NO.: 25024.00

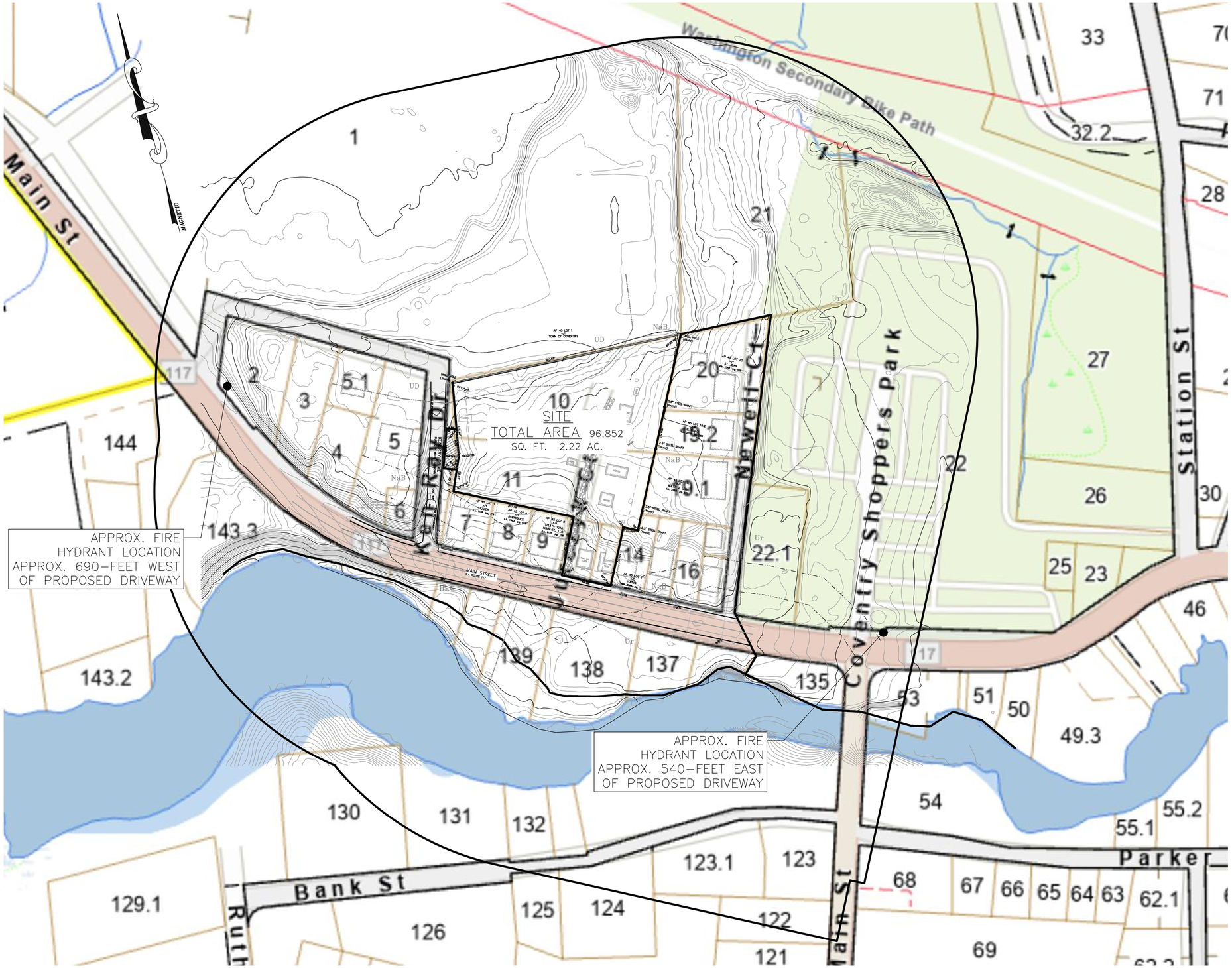

PLAN VIEW

GRAPHIC SCALE

80 0 40 80 160 320

(IN FEET)
1 inch = 80 ft.

OWNER/APPLICANT:
BOULDER HILL DEVELOPMENT, LLC
PATRICK CZERWIEN, MANAGER
57 PINE RIDGE DRIVE
CRANSTON, RI 02921
PHONE: (401) 413-5648

LEGAL COUNCIL:
MR. THOMAS CRONIN ESQ.
NOLAN, BRUNERO, CRONIN & FERRARA LTD.
1070 MAIN STREET
COVENTRY, RI 02816-5707
PHONE: (401) 828-5800

DRAWING ISSUE:

- ☐ CONCEPT
- ☐ CUSTOMER APPROVAL
- ☒ PERMITTING
- ☐ CONSTRUCTION
- ☐ AS-BUILT
- ☐ OTHER:

ONLY PLANS ISSUED FOR CONSTRUCTION SHALL BE USED FOR CONSTRUCTION

TIMOTHY J. BEHAN
No. 6278
REGISTERED PROFESSIONAL ENGINEER
04/21/2026

REVISIONS

No.	DATE	DRWN	CHKD
1	07-29-25	SMA	TJB
2	07-31-25	SMA	TJB
3	09-02-25	SMA	TJB
4	09-11-25	SMA	TJB
5	11-07-25	SMA	TJB
6	12-04-25	SMA	TJB
7	12-24-25	SMA	TJB
8	01-27-26	SMA	TJB
9	03-31-26	SMA	TJB
10	04-21-26	SMA	TJB

COMMONWEALTH
ENGINEERS & CONSULTANTS, INC.
400 SMITH STREET
PROVIDENCE, RHODE ISLAND 02908
(401) 273-6600

PRELIMINARY PLAN APPLICATION
COMPREHENSIVE PERMIT
FOR
SIENA CONDOMINIUMS
A.P. 45 LOTS 10, 11, 12 & 13
MAIN STREET
COVENTRY, RHODE ISLAND

500-FOOT RADIUS PLAN

SCALE: 1" = 80'		SHEET NO: 3 OF 20
DRAWN BY: SMA	DESIGN BY: SMA	CHECKED BY: TJB
DATE: MARCH 27, 2025		PROJECT NO.: 25024.00

SOIL TYPE NAME	SOIL DESCRIPTION	HYDROLOGIC SOIL GROUP
HkC	HINCKLEY LOAMY SAND, 8 TO 15 PERCENT SLOPES	A
NaB	NARRAGANSETT SILT LOAM, 3 TO 8 PERCENT SLOPES	B
UD	UDORTHENTS-URBAN LAND COMPLEX	A
Ur	URBAN LAND	A-D

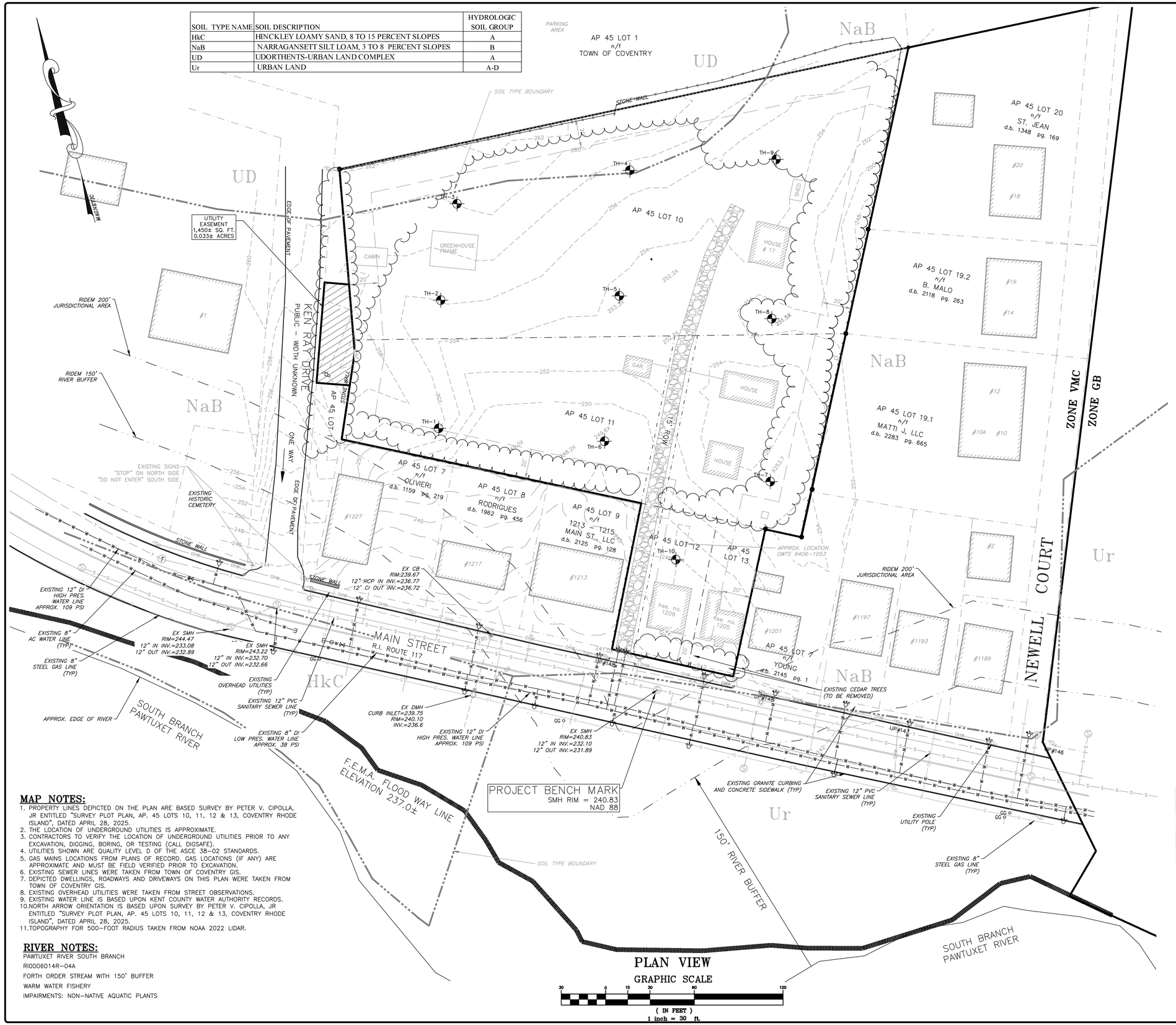

SITE NOTES:

1. WHERE REFERENCED HEREIN, THE TERM "PARCEL" SHALL BE APPLICABLE TO THE COMBINED LAND AREA ENCOMPASSED BY LOTS 10, 11, 12 & 13. ALL LOCATED ON ASSESSORS MAP 45.
2. THE SUBJECT PARCEL LIES WITHIN 'ZONE X–AREAS OF MINIMAL FLOOD HAZARD' AS DELINEATED ON THE FIRM FLOOD INSURANCE RATE MAP FOR KENT COUNTY, RHODE ISLAND (ALL JURISDICTIONS), MAP NUMBER 44003C0104H, EFFECTIVE DATE OCTOBER 2, 2015.
3. SUBJECT PARCELS ARE DEVELOPED WITH RESIDENTIAL DWELLINGS. GROUND COVERAGE IS LAWN WITH MIXED HARDWOOD SPECIES TREES ON THE PERIMETER OF THE SITE.
4. THERE IS AN OFF SITE CEMETERY (AP 45 LOT 6) LOCATED AT THE WEST SIDE OF KEN RAY DRIVE ALONG MAIN STREET.
5. AS SHOWN ON THE RIDEM ENVIRONMENTAL RESOURCE MAP AND TOWN OF COVENTRY GIS, THE SUBJECT PARCEL IS NOT LOCATED WITHIN EITHER OF THE FOLLOWING:
   - HISTORIC DISTRICT
   - COMMUNITY OR NON–COMMUNITY WELL HEAD PROTECTION AREA
   - RIDEM GROUNDWATER RESERVOIR, RECHARGE AREA OR SOLE SOURCE AQUIFER
6. THE SITE IS NOT LOCATED IN A NATURAL HERITAGE AREA.
7. SUBJECT PARCEL IS SERVICED BY KENT COUNTY WATER AUTHORITY.
8. SUBJECT PARCEL IS SERVICED BY COVENTRY SEWER AUTHORITY.
9. GROUNDWATER IN THE AREA IS CLASSIFIED GB BY RIDEM.
10. THE SOILS IN THE AREA ARE CLASSIFIED Ur–URBAN LAND AND NaB NARRAGANSETT SILT LOAM.
11. EXISTING OVERHEAD UTILITIES ARE LOCATED ALONG THE NORTH SIDE OF MAIN STREET.
12. THE SUBJECT PARCEL IS SERVICED BY THE CENTRAL FIRE DISTRICT.

COMMONWEALTH ENGINEERS AND CONSULTING INC. TEST HOLE SUMMARY

OBSERVED BY TIM BEHAN, P.E.

LOCATION	TP-1	6/30/2025
SURFACE GRADE	256.0±	FEET
0-6"	LOAM	
6-24"	SANDY LOAM SUBSOIL	
24-60"	MED. SAND	
60-144"	MED. SAND/FINE GRAVEL	
NO GW SEEPAGE, NO MOTTLING, NO LEDGE		

LOCATION	TP-2	6/30/2025
SURFACE GRADE	256.0±	FEET
0-6"	LOAM	
6-30"	SANDY LOAM SUBSOIL	
30-78"	VERY FINE SAND	
78-156"	MED. SAND/FINE GRAVEL	
NO GW SEEPAGE, NO MOTTLING, NO LEDGE		

LOCATION	TP-3	6/30/2025
SURFACE GRADE	260.0±	FEET
0-4"	LOAM	
4-24"	SANDY LOAM SUBSOIL/COBBLES	
24-144"	MED. SAND/FINE GRAVEL	
NO GW SEEPAGE, NO MOTTLING, NO LEDGE		

LOCATION	TP-4	6/30/2025
SURFACE GRADE	257.5±	FEET
0-6"	LOAM	
6-24"	SANDY LOAM SUBSOIL/COBBLES	
24-144"	MED. SAND/FINE GRAVEL	
NO GW SEEPAGE, NO MOTTLING, NO LEDGE		

LOCATION	TP-5	6/30/2025
SURFACE GRADE	253.7.0±	FEET
0-10"	LOAM	
10-30"	SANDY LOAM SUBSOIL	
30-72"	VERY FINE SAND	
72-144"	MED. SAND/FINE GRAVEL	
NO GW SEEPAGE, NO MOTTLING, NO LEDGE		

LOCATION	TP-6	6/30/2025
SURFACE GRADE	248.8±	FEET
0-10"	LOAM	
10-30"	SANDY LOAM SUBSOIL	
30-72"	VERY FINE SAND	
72-144"	MED. SAND/FINE GRAVEL	
NO GW SEEPAGE, NO MOTTLING, NO LEDGE		

LOCATION	TP-7	6/30/2025
SURFACE GRADE	253.7±	FEET
0-6"	LOAM	
6-24"	SANDY LOAM SUBSOIL/COBBLES	
24-144"	LOAMY, GRAVELLY SAND, BOULDERS	
NO GW SEEPAGE, NO MOTTLING, NO LEDGE		

LOCATION	TP-8	6/30/2025
SURFACE GRADE	252.0±	FEET
0-6"	LOAM	
6-30"	SANDY LOAM SUBSOIL	
30-72"	VERY FINE SAND	
72-132"	MED. SAND/FINE GRAVEL	
NO GW SEEPAGE, NO MOTTLING, NO LEDGE		

LOCATION	TP-9	6/30/2025
SURFACE GRADE	252.0±	FEET
0-6"	LOAM	
6-30"	SANDY LOAM SUBSOIL	
30-78"	VERY FINE SAND	
78-144"	MED. SAND/FINE GRAVEL	
NO GW SEEPAGE, NO MOTTLING, NO LEDGE		

LOCATION	TP-10	6/30/2025
SURFACE GRADE	246.0±	FEET
0-4"	LOAM	
4-24"	SANDY LOAM SUBSOIL	
24-60"	VERY FINE SAND	
60-144"	MED. SAND/FINE GRAVEL	
NO GW SEEPAGE, NO MOTTLING, NO LEDGE		

MAP NOTES:

1. PROPERTY LINES DEPICTED ON THE PLAN ARE BASED SURVEY BY PETER V. CIPOLLA, JR ENTITLED "SURVEY PLOT PLAN, AP. 45 LOTS 10, 11, 12 & 13, COVENTRY RHODE ISLAND", DATED APRIL 28, 2025.
2. THE LOCATION OF UNDERGROUND UTILITIES IS APPROXIMATE.
3. CONTRACTORS TO VERIFY THE LOCATION OF UNDERGROUND UTILITIES PRIOR TO ANY EXCAVATION, DIGGING, BORING, OR TESTING (CALL DIGSAFE).
4. UTILITIES SHOWN ARE QUALITY LEVEL D OF THE ASCE 38–02 STANDARDS.
5. GAS MAINS LOCATIONS FROM PLANS OF RECORD. GAS LOCATIONS (IF ANY) ARE APPROXIMATE AND MUST BE FIELD VERIFIED PRIOR TO EXCAVATION.
6. EXISTING SEWER LINES WERE TAKEN FROM TOWN OF COVENTRY GIS.
7. DEPICTED DWELLINGS, ROADWAYS AND DRIVEWAYS ON THIS PLAN WERE TAKEN FROM TOWN OF COVENTRY GIS.
8. EXISTING OVERHEAD UTILITIES WERE TAKEN FROM STREET OBSERVATIONS.
9. EXISTING WATER LINE IS BASED UPON KENT COUNTY WATER AUTHORITY RECORDS.
10. NORTH ARROW ORIENTATION IS BASED UPON SURVEY BY PETER V. CIPOLLA, JR ENTITLED "SURVEY PLOT PLAN, AP. 45 LOTS 10, 11, 12 & 13, COVENTRY RHODE ISLAND", DATED APRIL 28, 2025.
11. TOPOGRAPHY FOR 500–FOOT RADIUS TAKEN FROM NOAA 2022 LIDAR.

RIVER NOTES:

PAWTUXET RIVER SOUTH BRANCH

RI0006014R–04A

FORTH ORDER STREAM WITH 150' BUFFER

WARM WATER FISHERY

IMPAIRMENTS: NON–NATIVE AQUATIC PLANTS

PLAN VIEW

GRAPHIC SCALE

30 0 15 30 60 120

(IN FEET)
1 inch = 30 ft.

OWNER/APPLICANT:
BOULDER HILL DEVELOPMENT, LLC
PATRICK CZERWIEN, MANAGER
57 PINE RIDGE DRIVE
CRANSTON, RI 02921
PHONE: (401) 413–5648

LEGAL COUNCIL:
MR. THOMAS CRONIN ESQ.
NOLAN, BRUNERO, CRONIN & FERRARA LTD.
1070 MAIN STREET
COVENTRY, RI 02816–5707
PHONE: (401) 828–5800

DRAWING ISSUE:

- ☐ CONCEPT
- ☐ CUSTOMER APPROVAL
- ☒ PERMITTING
- ☐ CONSTRUCTION
- ☐ AS–BUILT
- ☐ OTHER:

ONLY PLANS ISSUED FOR CONSTRUCTION SHALL BE USED FOR CONSTRUCTION

TIMOTHY J. BEHAN
No. 6278
REGISTERED PROFESSIONAL ENGINEER
04/21/2026

REVISIONS

No.	DATE	DRWN	CHKD
1	07–29–25	SMA	TJB
2	07–31–25	SMA	TJB
3	09–02–25	SMA	TJB
4	09–11–25	SMA	TJB
5	11–07–25	SMA	TJB
6	12–04–25	SMA	TJB
7	12–24–25	SMA	TJB
8	01–27–26	SMA	TJB
9	03–31–26	SMA	TJB
10	04–21–26	SMA	TJB

COMMONWEALTH
ENGINEERS & CONSULTANTS, INC.
400 SMITH STREET
PROVIDENCE, RHODE ISLAND 02908
(401) 273–6600

PRELIMINARY PLAN APPLICATION
COMPREHENSIVE PERMIT
FOR
SIENA CONDOMINIUMS
A.P. 45 LOTS 10, 11, 12 & 13
MAIN STREET
COVENTRY, RHODE ISLAND

EXISTING CONDITIONS PLAN

SCALE: 1" = 30'		SHEET NO: 4 OF 20
DRAWN BY: SMA	DESIGN BY: SMA	CHECKED BY: TJB
DATE: MARCH 27, 2025		PROJECT NO.: 25024.00

PLAN VIEW

GRAPHIC SCALE

30 0 15 30 60 120

(IN FEET)
1 inch = 30 ft.

ZONING CRITERIA:

SUBJECT LOT = A.P. 50 LOTS 10, 11, 12 & 13
AREA = 96,852 S.F. (2.2 AC.+/–)
UPLAND AREA = 96,852 S.F. (2.2 AC.+/–)
ZONE: VCM – VILLAGE MAIN STREET COMMERCIAL
PUBLIC WATER & SEWER PROPOSED
FIRE SERVICE BY CENTRAL FIRE DISTRICT

ZONING REGULATIONS SECTION 255–610 TABLE 6–2

CRITERIA	REQUIRED	PROPOSED
MINIMUM LOT AREA:	7,500 SQ. FT	96,852 SQ. FT.
MINIMUM LOT FRONTAGE	80'	86.8'±
MINIMUM BUILDING HEIGHT:	35'	<35'
MAXIMUM LOT COVERAGE:	60%	39.6%
FRONT SETBACK:	10'	>20'
INTERIOR SIDE SETBACK:	10'	>20'
CORNER SIDE SETBACK:	10'	>20'
REAR SETBACK:	20'	>20'

PROPOSED DENSITY:

16 UNITS ON 2.2 AC. = 7.27 UNITS/ACRE

PARKING CALCULATIONS:

16 UNITS X 2 SPACES/UNIT = 32 REQUIRED

1 SPACE PER GARAGE X 16 GARAGES = 16 SPACES
2 SPACES PER DRIVEWAY X 16 DRIVEWAYS = 32 SPACES
TOTAL SPACES PROVIDED = 48 SPACES > 32 REQUIRED.

IMPERVIOUS CALCULATION:
STREET AND DRIVEWAYS = 19,700 SQ. FT.
2–FAMILY BUILDINGS = 15,392 SQ. FT.
WALKWAYS = 1,600 SQ. FT.
PATIOS = 1,280 SQ. FT.
TOTAL = 37,972 SQ. FT. OR 39.6%

BUILDING COVERAGE:
15,393 / 96,852 = 15.8%

LAND SUITABLE FOR DEVELOPMENT:

WETLANDS:	0 AC.
FLOOD ZONE:	0 AC.
STREETS:	0 AC.
EASEMENTS:	0 AC. (EXISTING EASEMENT TO BE ABANDONED)
STEEP SLOPES:	0 AC.
TOTAL:	0 AC.

SITE IMPROVEMENT QUANTITIES:

THE SITE PROPOSES THE CONSTRUCTION OF THE FOLLOWING IMPROVEMENTS:

- TWENTY–FOUR (24) FOOT WIDE PRIVATE ROADWAY – 610 LF
- ASPHALT PARKING AREA, 3.5–INCH THICK – 8,490 SQ FT
- DRIVEWAY AND PARKING AREA BITUMINOUS CONCRETE BERM, 1' WIDE – 932 LF
- FOUR (4) –FOOT WIDE CONCRETE SIDEWALKS – 0 L.F.
- PRECAST CONCRETE CURB – 0 L.F.

DEMOLITION NOTES:

THE SITE IS CURRENTLY VACANT AND UTILITIES ARE ASSUMED ACTIVE. THE PROPERTY CURRENTLY CONTAINS FIVE (5) HOUSES, A GARAGE AND SEVERAL OUTBUILDING THAT ARE TO BE REMOVED AND BE DISPOSED OF IN A LEGAL MANNER. THE CONTRACTOR SHALL CONTACT 'DIGSAFE' AT 1–888–344–7233 AT LEAST 72 HOURS PRIOR TO ANY DEMOLITION, EXCAVATION OR CONSTRUCTION.

DEMOLITION AT THE SITE WILL INCLUDE:

1. CONTRACTOR SHALL BE RESPONSIBLE FOR THE COORDINATION AND OBTAINING ANY PERMITS REQUIRED FOR ALL DEMOLITION.
2. REMOVE EXISTING UTILITIES AND CAP/CLOSE OUT PER UTILITY OWNERS SPECIFICATION. CONTRACTOR TO COORDINATE WITH UTILITY OWNERS AND SHALL BE RESPONSIBLE TO OBTAIN ANY PERMITS REQUIRED.
3. EXISTING UTILITIES LOCATIONS SHOWN ARE APPROXIMATE AND ADDITIONAL UTILITIES MAY BE PRESENT.
4. EXISTING SITE IMPROVEMENTS INCLUDING CURBS, PAVER STONES, TREES AND DEBRIS TO BE REMOVED AND LEGALLY DISPOSED.
5. CONTRACTOR SHALL COORDINATE ANY DEMOLITION IN THE RIDOT AND/OR TON OF COVENTRY R.O.W. AND SHALL BE RESPONSIBLE FOR ANY PERMITS REQUIRED.
6. CONTRACTOR TO COORDINATE REMOVAL OF ANY FENCES LOCATED ALONG OR NEAR THE PROPERTY LINE WITH THE ABUTTING OWNER (IF ANY).
7. ANY EXISTING OWTS ENCOUNTERED SHALL BE CLOSE PER RIDEM OWTS REGULATIONS. ANY OWTS COMPONENTS REMOVED SHALL BE DISPOSED OF IN A LEGAL MANNER.
8. ALL MATERIALS REMOVED FROM THE SITE SHALL BE DISPOSED OF IN A LEGAL MANNER.
9. ANY REMAINING FOUNDATIONS FROM PREVIOUS BUILDINGS SHALL BE REMOVED AND BE DISPOSED OF IN A LEGAL MANNER.

OWNER/APPLICANT:
BOULDER HILL DEVELOPMENT, LLC
PATRICK CZERWIEN, MANAGER
57 PINE RIDGE DRIVE
CRANSTON, RI 02921
PHONE: (401) 413–5648

LEGAL COUNCIL:
MR. THOMAS CRONIN ESQ.
NOLAN, BRUNERO, CRONIN & FERRARA LTD.
1070 MAIN STREET
COVENTRY, RI 02816–5707
PHONE: (401) 828–5800

DRAWING ISSUE:

- ☐ CONCEPT
- ☐ CUSTOMER APPROVAL
- ☒ PERMITTING
- ☐ CONSTRUCTION
- ☐ AS–BUILT
- ☐ OTHER:

ONLY PLANS ISSUED FOR CONSTRUCTION SHALL BE USED FOR CONSTRUCTION

TIMOTHY J. BEHAN
No 6278
REGISTERED PROFESSIONAL ENGINEER
04/21/2026

REVISIONS

No.	DATE	DRWN	CHKD
1	07–29–25	SMA	TJB
2	07–31–25	SMA	TJB
3	09–02–25	SMA	TJB
4	09–11–25	SMA	TJB
5	11–07–25	SMA	TJB
6	12–04–25	SMA	TJB
7	12–24–25	SMA	TJB
8	01–27–26	SMA	TJB
9	03–31–26	SMA	TJB
10	04–21–26	SMA	TJB

COMMONWEALTH
ENGINEERS & CONSULTANTS, INC.
400 SMITH STREET
PROVIDENCE, RHODE ISLAND 02908
(401) 273–6600

PRELIMINARY PLAN APPLICATION
COMPREHENSIVE PERMIT
FOR
SIENA CONDOMINIUMS
A.P. 45 LOTS 10, 11, 12 & 13
MAIN STREET
COVENTRY, RHODE ISLAND

PROPOSED LAYOUT PLAN

SCALE: 1" = 30'		SHEET NO: 5 OF 20
DRAWN BY: SMA	DESIGN BY: SMA	CHECKED BY: TJB
DATE: MARCH 27, 2025		PROJECT NO.: 25024.00

RIDOT LEGEND

7.3.0	GRANITE CURB
7.3.1	GRANITE 3-FOOT TRANSITION CURB
7.6.0	CURB SETTING DETAIL
9.9.0	CONSTRUCTION ACCESS
43.1.0	CEMENT CONCRETE SIDEWALK
43.4.0	DRIVEWAY DEVELOPMENT FOR 3-FOOT TRANSITION CURB
43.5.0	CEMENT CONCRETE DRIVEWAY
S-1	FULL DEPTH SAWCUT & MATCH BITUMINOUS AND CEMENT CONCRETE ROADWAY PAVEMENT; FOR INSTALLATION OF NEW CEMENT CONCRETE BASE: DRILL AND DOWEL C/C 24"
S-2	FULL DEPTH SAWCUT & MATCH BITUMINOUS ROADWAY PAVEMENT (DO NOT CUT CEMENT CONCRETE PAVEMENT)
LS	4" LOAM AND SEED
RDCS	REMOVE & DISPOSE CONCRETE SIDEWALK
RDRP	REMOVE & DISPOSE RIGID PAVEMENT
RDFP	REMOVE & DISPOSE FLEXIBLE PAVEMENT
6W	6" PAVEMENT MARKINGS - WHITE
D4Y	DOUBLE 4" PAVEMENT MARKINGS - YELLOW
MEC	MATCH EXISTING CURB

LEGEND

	PARCEL PROPERTY LINE
	ADJACENT PROPERTY LINE
	EXISTING RIGHT OF WAY LINE
40	EXISTING MAJOR CONTOUR
27	EXISTING MINOR CONTOUR
G	EXISTING GAS LINE
W	EXISTING WATER LINE
S	EXISTING SEWER LINE
GG	GAS VALVE BOX
WV	WATER VALVE BOX
CS	CURB STOP
UP-297	UTILITY POLE AND NUMBER
SMH	EXISTING SEWER MANHOLE
COM-MH	EXISTING COMMUNICATIONS MANHOLE
DMH	DRAINAGE MANHOLE
DI/CB CB	CATCH BASIN OR DROP INLET
X39.50	EXISTING SPOT GRADE
40	PROPOSED CONTOUR LINE
X39.50	PROPOSED SPOT GRADE
	EXISTING GUARD RAIL
W	PROPOSED WATER LINE
S	PROPOSED SEWER LINE
	BUILDING SETBACK LINE
	FIRE HYDRANT
MW	MONITORING WELL
	EX. CHAIN LINK FENCE (HEIGHT VARIES)
	PROPOSED CHAIN LINK FENCE
	PERIMETER EROSION CONTROLS (COMPOST FILTER SOCK)
TH-5	TEST HOLE LOCATION
BWV	BACKWATER VALVE
CO	CLEANOUT
FD	PROPOSED ROOF DRAIN (RD)
RD	PROPOSED FOUNDATION DRAIN (FD)

RIDOT R.O.W. NOTES:

1. ALL WORK TO BE PERFORMED WITHIN THE STATE HIGHWAY RIGHT OF WAY (R.O.W.) SHALL CONFORM TO THE RHODE ISLAND STANDARD SPECIFICATIONS FOR ROAD AND BRIDGE CONSTRUCTION, AUGUST 2025 EDITION WITH ALL REVISIONS. STANDARD DETAILS FOR THIS WORK ARE R.I. STANDARD DETAILS 1998 EDITION (AMENDED FEBRUARY 2025) WITH ALL REVISIONS.
2. ALL TRAFFIC CONTROL SHALL CONFORM TO THE MANUAL ON UNIFORM TRAFFIC CONTROL DEVICES 2013, INCLUDING ALL REVISIONS.
3. CONTRACTOR MUST SUBMIT AN APPLICATION AND APPLY FOR SEPARATE UTILITY PERMIT FOR ALL UTILITY WORK TO BE PERFORMED IN THE RIDOT R.O.W.. THE APPROVAL OF THE PAPA IS NOT A SUBSTITUTE FOR A UTILITY PERMIT AND APPROVAL OF THE PAPA DOES NOT CONSTITUTE APPROVAL OF ANY UTILITY WORK, SHOWN OR UNSHOWN, WITHIN THE STATE R.O.W..

PLAN VIEW

GRAPHIC SCALE

30 0 15 30 60 120

(IN FEET)
1 inch = 30 ft.

CONSTRUCTION NOTE:

1. THE CONTRACTOR SHALL CONTACT 'DIGSAFE' AT 1-888-344-7233 AT LEAST 72 HOURS PRIOR TO ANY EXCAVATION OR CONSTRUCTION.

OWNER/APPLICANT:
BOULDER HILL DEVELOPMENT, LLC
PATRICK CZERWIEN, MANAGER
57 PINE RIDGE DRIVE
CRANSTON, RI 02921
PHONE: (401) 413-5648

LEGAL COUNCIL:
MR. THOMAS CRONIN ESQ.
NOLAN, BRUNERO, CRONIN & FERRARA LTD.
1070 MAIN STREET
COVENTRY, RI 02816-5707
PHONE: (401) 828-5800

DRAWING ISSUE:

- [ ] CONCEPT
- [ ] CUSTOMER APPROVAL
- [x] PERMITTING
- [ ] CONSTRUCTION
- [ ] AS-BUILT
- [ ] OTHER:

ONLY PLANS ISSUED FOR CONSTRUCTION SHALL BE USED FOR CONSTRUCTION

TIMOTHY J. BEHAN
No. 6278
REGISTERED PROFESSIONAL ENGINEER
04/21/2026

REVISIONS

No.	DATE	DRWN	CHKD
1	07-29-25	SMA	TJB
2	07-31-25	SMA	TJB
3	09-02-25	SMA	TJB
4	09-11-25	SMA	TJB
5	11-07-25	SMA	TJB
6	12-04-25	SMA	TJB
7	12-24-25	SMA	TJB
8	01-27-26	SMA	TJB
9	03-31-26	SMA	TJB
10	04-21-26	SMA	TJB

COMMONWEALTH
ENGINEERS & CONSULTANTS, INC.
400 SMITH STREET
PROVIDENCE, RHODE ISLAND 02908
(401) 273-6600

PRELIMINARY PLAN APPLICATION
COMPREHENSIVE PERMIT
FOR
SIENA CONDOMINIUMS
A.P. 45 LOTS 10, 11, 12 & 13
MAIN STREET
COVENTRY, RHODE ISLAND

PROPOSED GRADING PLAN

SCALE: 1" = 30'	SHEET NO: 6 OF 20	
DRAWN BY: SMA	DESIGN BY: SMA	CHECKED BY: TJB
DATE: MARCH 27, 2025	PROJECT NO.: 25024.00	

PLAN VIEW

GRAPHIC SCALE

30 0 15 30 60 120

(IN FEET)
1 inch = 30 ft.

CONSTRUCTION NOTE:

1. THE CONTRACTOR SHALL CONTACT 'DIGSAFE' AT 1-888-344-7233 AT LEAST 72 HOURS PRIOR TO ANY EXCAVATION OR CONSTRUCTION.

DRAINAGE NOTES:

1. SOME STRUCTURES MAY REQUIRE SHALLOW FRAMES (4-INCH HEIGHT).
2. SHALLOW FRAMES TO BE MECHANICALLY FASTENED (BOLTED) TO STRUCTURES.
3. MOST STRUCTURES REQUIRE FLAT TOPS.
4. ALL CATCH BASINS SHALL HAVE 3-FOOT SUMPS MEASURED BELOW LOWEST INVERT.
5. SHOP DRAWINGS SHALL BE SUBMITTED TO ENGINEER FOR ALL DRAINAGE COMPONENTS.
6. ENGINEER SHALL INSPECT THE BOTTOM OF EACH INFILTRATION AREA PRIOR TO PLACEMENT OF CRUSHED STONE.
7. ENGINEER SHALL BE NOTIFIED A MIN. OF 24 HOURS BEFORE CONSTRUCTING ANY INFILTRATION SYSTEM OR UNDERGROUND LINED SAND FILTERS.
8. ALL FILL AND UNSUITABLE MATERIAL SHALL BE REMOVED FROM BENEATH ALL INFILTRATION SYSTEMS.
9. ANY BACKFILL PLACED BELOW INFILTRATION SYSTEMS SHALL BE ASTM C-33 SAND.
10. SCARIFY BOTTOM PRIOR TO PLACEMENT OF STONE OR ASTM C-33 SAND.
11. DO NOT ALLOW SEDIMENT LADEN RUNOFF TO ENTER SYSTEM.
12. INSTALL FABRIC DROP OR SILT SACK IN EACH NEW CATCH BASIN AS FRAME AND GRATE IS INSTALLED.

LEGEND

- PARCEL PROPERTY LINE
- ADJACENT PROPERTY LINE
- EXISTING RIGHT OF WAY LINE
- 40 EXISTING MAJOR CONTOUR
- 27 EXISTING MINOR CONTOUR
- G EXISTING GAS LINE
- W EXISTING WATER LINE
- S EXISTING SEWER LINE
- GG GAS VALVE BOX
- WV WATER VALVE BOX
- CURB STOP
- UP-297 UTILITY POLE AND NUMBER
- SMH EXISTING SEWER MANHOLE
- COM-MH EXISTING COMMUNICATIONS MANHOLE
- DMH DRAINAGE MANHOLE
- DI/CB CB CATCH BASIN OR DROP INLET
- X39.50 EXISTING SPOT GRADE
- 40 PROPOSED CONTOUR LINE
- X39.50 PROPOSED SPOT GRADE
- EXISTING GUARD RAIL
- W PROPOSED WATER LINE
- S PROPOSED SEWER LINE
- BUILDING SETBACK LINE
- FIRE HYDRANT
- MW MONITORING WELL
- EX. CHAIN LINK FENCE (HEIGHT VARIES)
- PROPOSED CHAIN LINK FENCE
- PERIMETER EROSION CONTROLS (COMPOST FILTER SOCK)
- TH-5 TEST HOLE LOCATION
- BWV BACKWATER VALVE
- CO CLEANOUT
- FD PROPOSED ROOF DRAIN (RD)
- RD PROPOSED FOUNDATION DRAIN (FD)

OWNER/APPLICANT:
BOULDER HILL DEVELOPMENT, LLC
PATRICK CZERWIEN, MANAGER
57 PINE RIDGE DRIVE
CRANSTON, RI 02921
PHONE: (401) 413-5648

LEGAL COUNCIL:
MR. THOMAS CRONIN ESQ.
NOLAN, BRUNERO, CRONIN & FERRARA LTD.
1070 MAIN STREET
COVENTRY, RI 02816-5707
PHONE: (401) 828-5800

DRAWING ISSUE:

- ☐ CONCEPT
- ☐ CUSTOMER APPROVAL
- ☒ PERMITTING
- ☐ CONSTRUCTION
- ☐ AS-BUILT
- ☐ OTHER:

ONLY PLANS ISSUED FOR CONSTRUCTION SHALL BE USED FOR CONSTRUCTION

TIMOTHY J. BEHAN
No 6278
REGISTERED PROFESSIONAL ENGINEER
04/21/2026

REVISIONS

No.	DATE	DRWN	CHKD
1	07-29-25	SMA	TJB
2	07-31-25	SMA	TJB
3	09-02-25	SMA	TJB
4	09-11-25	SMA	TJB
5	11-07-25	SMA	TJB
6	12-04-25	SMA	TJB
7	12-24-25	SMA	TJB
8	01-27-26	SMA	TJB
9	03-31-26	SMA	TJB
10	04-21-26	SMA	TJB

COMMONWEALTH
ENGINEERS & CONSULTANTS, INC.
400 SMITH STREET
PROVIDENCE, RHODE ISLAND 02908
(401) 273-6600

PRELIMINARY PLAN APPLICATION
COMPREHENSIVE PERMIT
FOR
SIENA CONDOMINIUMS
A.P. 45 LOTS 10, 11, 12 & 13
MAIN STREET
COVENTRY, RHODE ISLAND

PROPOSED DRAINAGE PLAN

SCALE: 1" = 30'		SHEET NO: 7 OF 20
DRAWN BY: SMA	DESIGN BY: SMA	CHECKED BY: TJB
DATE: MARCH 27, 2025		PROJECT NO.: 25024.00

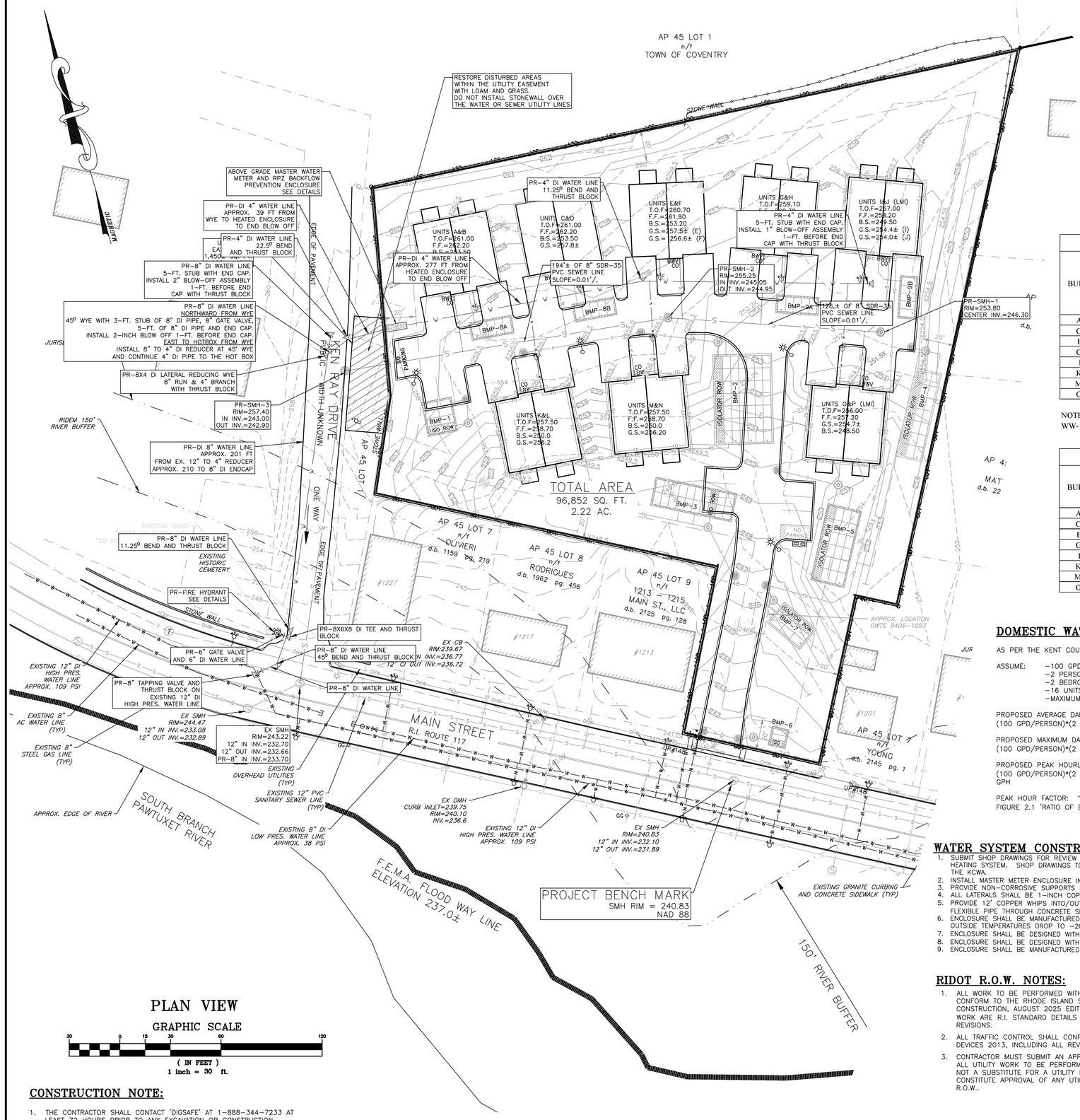

PLAN VIEW

GRAPHIC SCALE

30 0 15 30 60 120

(IN FEET)
1 inch = 30 ft.

CONSTRUCTION NOTE:

1. THE CONTRACTOR SHALL CONTACT 'DIGSAFE' AT 1-888-344-7233 AT LEAST 72 HOURS PRIOR TO ANY EXCAVATION OR CONSTRUCTION.

ESTIMATED PROPOSED DAILY DESIGN WASTEWATER FLOWS PER RIDEM REGULATIONS			
TYPE	DESIGN FLOW	DESIGN UNITS	DESIGN FLOW
BEDROOMS	115 GAL/BEDROOM/DAY	32	3,680
EMPLOYEE	15 GAL/EMPLOYEE/DAY	0	0
WASHING MACHINE	500 GAL/MACHINE/DAY	0	0
TOTAL ESTIMATED MAXIMUM DAILY DESIGN FLOW (GAL.)			3,680

SEWER LATERAL SUMMARY TABLE						
BUILDING	CONNECTION STATION	TOP SEWER MAIN AT LATERAL CONNECTION (FT)	LATERAL INVERT ELEVATION AT SEWER MAIN WITH 2% SLOPE	LATERAL LENGTH	LATERAL INVERT AT BUILDING (FT)	BASEMENT SLAB (FT)
A & B	2+71.65	244.38	250.31	34.50	251.00	253.50
C & D	2+09.35	245.01	250.27	36.50	251.00	253.50
E & F	1+39.50	245.79	249.98	36.00	250.70	253.20
G & H	0+92.60	246.26	248.26	41.80	249.10	251.60
I & J	0+28.50	246.90	249.52	49.00	250.50	249.50
K & L	2+41.60	244.68	246.89	30.50	247.50	250.00
M & N	1+73.30	245.38	246.88	31.00	247.50	250.00
O & P	0+30.90	246.90	248.84	33.00	249.50	248.50

NOTE: USE EITHER STANDARD HOUSE CONNECTION-WEST WARWICK SEWER AUTHORITY DETAIL WW-14 OR STANDARD DEEP HOUSE CONNECTION-WEST WARWICK SEWER AUTHORITY DETAIL

WATER LATERAL SUMMARY TABLE				
BUILDING	CONNECTION STATION	1-INCH LATERAL LENGTH (FT)	LATERAL INVERT AT BUILDING (FT)	BASEMENT SLAB (FT)
A & B	2+59.50	13.0	254.50	253.50
C & D	1+96.30	14.0	254.50	253.50
E & F	1+51.10	13.1	254.20	253.20
G & H	0+81.60	16.5	252.60	251.60
I & J	0+36.30	18.5	250.50	249.50
K & L	2+28.66	52.5	251.00	250.00
M & N	1+57.72	55.5	251.00	250.00
O & P	0+43.00	60.0	249.50	248.50

DOMESTIC WATER DEMANDS:609

AS PER THE KENT COUNTY RULES & REGULATIONS, PART III:

ASSUME:
- -100 GPD PER PERSON
- -2 PERSONS PER BEDROOM
- -2 BEDROOMS PER UNIT
- -16 UNITS
- -MAXIMUM DAY MULTIPLIER = 2.0

PROPOSED AVERAGE DAILY FLOW:
(100 GPD/PERSON)*(2 PERSONS/BEDROOM)*(2 BEDROOMS/UNIT)*(16 UNITS) = 6,400 GPD

PROPOSED MAXIMUM DAILY FLOW:
(100 GPD/PERSON)*(2 PERSONS/BEDROOM)*(2 BEDROOMS/UNIT)*(16 UNITS)*2.0 = 12,800 GPD

PROPOSED PEAK HOURLY FLOW:
(100 GPD/PERSON)*(2 PERSONS/BEDROOM)*(2 BEDROOMS/UNIT)*(16 UNITS)*5.71/ = 1523 GPH

PEAK HOUR FACTOR: "TR-16 GUIDES FOR THE DESIGN OF WASTEWATER TREATMENT WORKS" FIGURE 2.1 'RATIO OF EXTREME FLOW TO AVERAGE DAILY FLOW'

WATER SYSTEM CONSTRUCTION NOTES:

1. SUBMIT SHOP DRAWINGS FOR REVIEW AND APPROVAL OF ENTIRE MASTER METER ENCLOSURE, ASSEMBLY AND HEATING SYSTEM. SHOP DRAWINGS TO BE STAMPED BY A R.I. PROFESSIONAL ENGINEER AND APPROVED BY THE KCWA.
2. INSTALL MASTER METER ENCLOSURE IN STRICT CONFORMANCE WITH MANUFACTURER'S INSTRUCTIONS.
3. PROVIDE NON-CORROSIVE SUPPORTS FOR RPZ AND METER, CONCRETE OR EQUAL.
4. ALL LATERALS SHALL BE 1-INCH COPPER TYPE K.
5. PROVIDE 12' COPPER WHIPS INTO/OUT OF STRUCTURE. SERVICE PIPE SHALL BE SLEEVED IN 4" HDPE FLEXIBLE PIPE THROUGH CONCRETE SLAB. 4" SLEEVE SHALL EXTEND TO FROST DEPTH OF 4'-6"
6. ENCLOSURE SHALL BE MANUFACTURED TO PREVENT FREEZING TEMPERATURES WITHIN ENCLOSURE WHEN OUTSIDE TEMPERATURES DROP TO -20°F.
7. ENCLOSURE SHALL BE DESIGNED WITH 'FLIP TOPS' FOR EASY ACCESS AND MAINTENANCE.
8. ENCLOSURE SHALL BE DESIGNED WITH 'BLOW OUT PANELS' TO ACCOMMODATE RPZ FLOW RATES OF 300 GPM.
9. ENCLOSURE SHALL BE MANUFACTURED BY HOTBOX OR EQUAL.

RIDOT R.O.W. NOTES:

1. ALL WORK TO BE PERFORMED WITHIN THE STATE HIGHWAY RIGHT OF WAY (R.O.W.) SHALL CONFORM TO THE RHODE ISLAND STANDARD SPECIFICATIONS FOR ROAD AND BRIDGE CONSTRUCTION, AUGUST 2025 EDITION WITH ALL REVISIONS. STANDARD DETAILS FOR THIS WORK ARE R.I. STANDARD DETAILS 1998 EDITION (AMENDED FEBRUARY 2025) WITH ALL REVISIONS.
2. ALL TRAFFIC CONTROL SHALL CONFORM TO THE MANUAL ON UNIFORM TRAFFIC CONTROL DEVICES 2013, INCLUDING ALL REVISIONS.
3. CONTRACTOR MUST SUBMIT AN APPLICATION AND APPLY FOR SEPARATE UTILITY PERMIT FOR ALL UTILITY WORK TO BE PERFORMED IN THE RIDOT R.O.W.. THE APPROVAL OF THE PAPA IS NOT A SUBSTITUTE FOR A UTILITY PERMIT AND APPROVAL OF THE PAPA DOES NOT CONSTITUTE APPROVAL OF ANY UTILITY WORK, SHOWN OR UNSHOWN, WITHIN THE STATE R.O.W..

LEGEND

- PARCEL PROPERTY LINE
- ADJACENT PROPERTY LINE
- EXISTING RIGHT OF WAY LINE
- 40 EXISTING MAJOR CONTOUR
- 27 EXISTING MINOR CONTOUR
- G EXISTING GAS LINE
- W W W EXISTING WATER LINE
- S S EXISTING SEWER LINE
- GG GAS VALVE BOX
- WV WATER VALVE BOX
- CURB STOP
- UP-297 UTILITY POLE AND NUMBER
- SMH EXISTING SEWER MANHOLE
- COM-MH EXISTING COMMUNICATIONS MANHOLE
- DMH DRAINAGE MANHOLE
- DI/CB CB CATCH BASIN OR DROP INLET
- X39.50 EXISTING SPOT GRADE
- 40 PROPOSED CONTOUR LINE
- X39.50 PROPOSED SPOT GRADE
- EXISTING GUARD RAIL
- W W W PROPOSED WATER LINE
- S S PROPOSED SEWER LINE
- BUILDING SETBACK LINE
- FIRE HYDRANT
- MW MONITORING WELL
- EX. CHAIN LINK FENCE (HEIGHT VARIES)
- PROPOSED CHAIN LINK FENCE
- PERIMETER EROSION CONTROLS (COMPOST FILTER SOCK)
- TH-5 TEST HOLE LOCATION
- BWV BACKWATER VALVE
- CO CLEANOUT
- FD PROPOSED ROOF DRAIN (RD)
- RD PROPOSED FOUNDATION DRAIN (FD)

OWNER/APPLICANT:
BOULDER HILL DEVELOPMENT, LLC
PATRICK CZERWIEN, MANAGER
57 PINE RIDGE DRIVE
CRANSTON, RI 02921
PHONE: (401) 413-5648

LEGAL COUNCIL:
MR. THOMAS CRONIN ESQ.
NOLAN, BRUNERO, CRONIN & FERRARA LTD.
1070 MAIN STREET
COVENTRY, RI 02816-5707
PHONE: (401) 828-5800

DRAWING ISSUE:
- ☐ CONCEPT
- ☐ CUSTOMER APPROVAL
- ☒ PERMITTING
- ☐ CONSTRUCTION
- ☐ AS-BUILT
- ☐ OTHER:

ONLY PLANS ISSUED FOR CONSTRUCTION SHALL BE USED FOR CONSTRUCTION

TIMOTHY J. BEHAN
No 6278
REGISTERED PROFESSIONAL ENGINEER
04/21/2026

REVISIONS

No.	DATE	DRWN	CHKD
1	07-29-25	SMA	TJB
2	07-31-25	SMA	TJB
3	09-02-25	SMA	TJB
4	09-11-25	SMA	TJB
5	11-07-25	SMA	TJB
6	12-04-25	SMA	TJB
7	12-24-25	SMA	TJB
8	01-27-26	SMA	TJB
9	03-31-26	SMA	TJB
10	04-21-26	SMA	TJB

COMMONWEALTH
ENGINEERS & CONSULTANTS, INC.
400 SMITH STREET
PROVIDENCE, RHODE ISLAND 02908
(401) 273-6600

PRELIMINARY PLAN APPLICATION
COMPREHENSIVE PERMIT
FOR
SIENA CONDOMINIUMS
A.P. 45 LOTS 10, 11, 12 & 13
MAIN STREET
COVENTRY, RHODE ISLAND

PROPOSED UTILITY PLAN

SCALE: 1" = 30'		SHEET NO: 8 OF 20
DRAWN BY: SMA	DESIGN BY: SMA	CHECKED BY: TJB
DATE: MARCH 27, 2025		PROJECT NO.: 25024.00

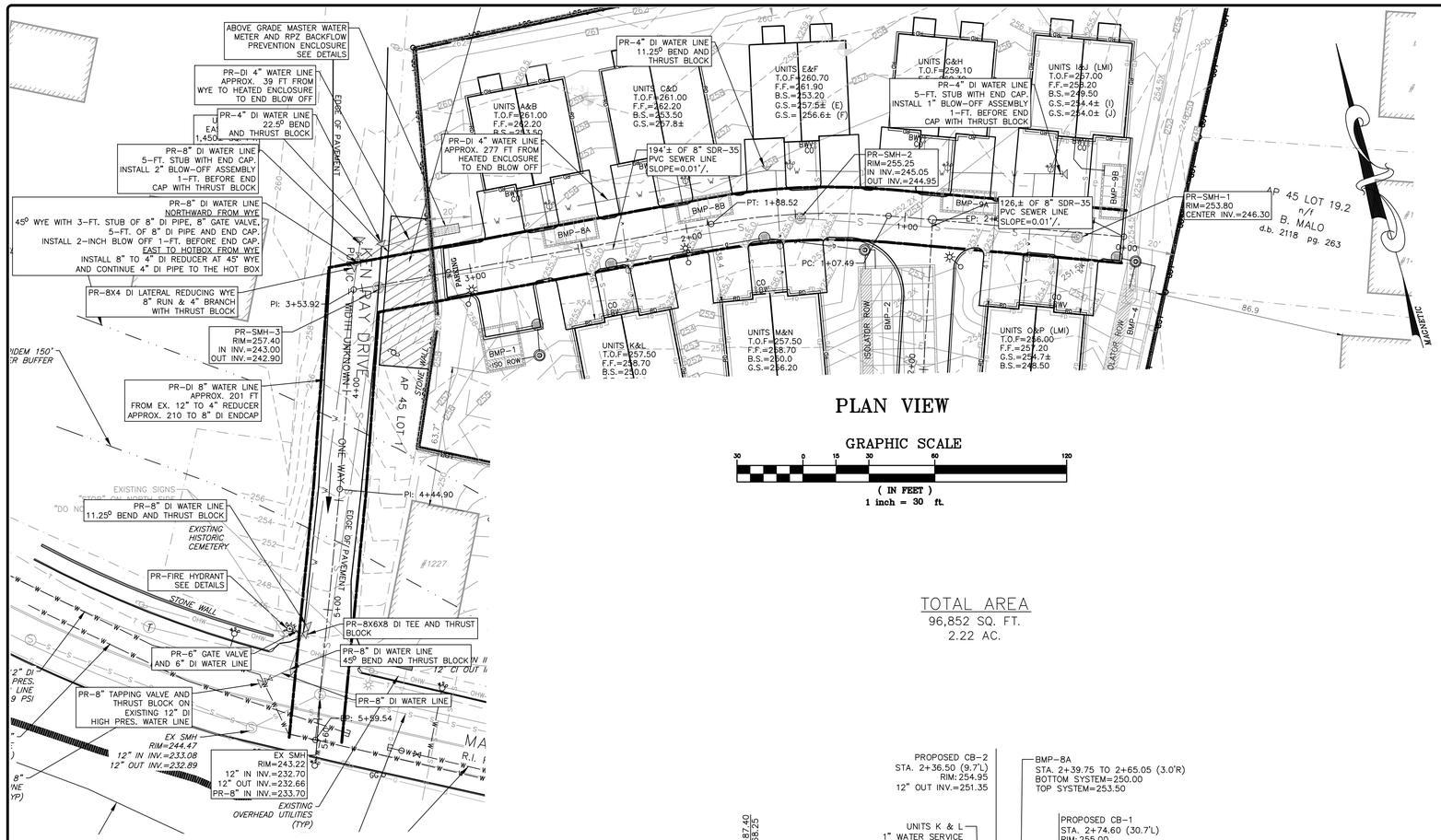

PLAN VIEW

GRAPHIC SCALE

30 0 15 30 60 120

(IN FEET)
1 inch = 30 ft.

TOTAL AREA
96,852 SQ. FT.
2.22 AC.

RIDOT R.O.W. NOTES:

1. ALL WORK TO BE PERFORMED WITHIN THE STATE HIGHWAY RIGHT OF WAY (R.O.W.) SHALL CONFORM TO THE RHODE ISLAND STANDARD SPECIFICATIONS FOR ROAD AND BRIDGE CONSTRUCTION, AUGUST 2025 EDITION WITH ALL REVISIONS. STANDARD DETAILS FOR THIS WORK ARE R.I. STANDARD DETAILS 1998 EDITION (AMENDED FEBRUARY 2025) WITH ALL REVISIONS.
2. ALL TRAFFIC CONTROL SHALL CONFORM TO THE MANUAL ON UNIFORM TRAFFIC CONTROL DEVICES 2013, INCLUDING ALL REVISIONS.
3. CONTRACTOR MUST SUBMIT AN APPLICATION AND APPLY FOR SEPARATE UTILITY PERMIT FOR ALL UTILITY WORK TO BE PERFORMED IN THE RIDOT R.O.W.. THE APPROVAL OF THE PAPA IS NOT A SUBSTITUTE FOR A UTILITY PERMIT AND APPROVAL OF THE PAPA DOES NOT CONSTITUTE APPROVAL OF ANY UTILITY WORK, SHOWN OR UNSHOWN, WITHIN THE STATE R.O.W..

CONSTRUCTION NOTE:

1. THE CONTRACTOR SHALL CONTACT 'DIGSAFE' AT 1-888-344-7233 AT LEAST 72 HOURS PRIOR TO ANY EXCAVATION OR CONSTRUCTION.

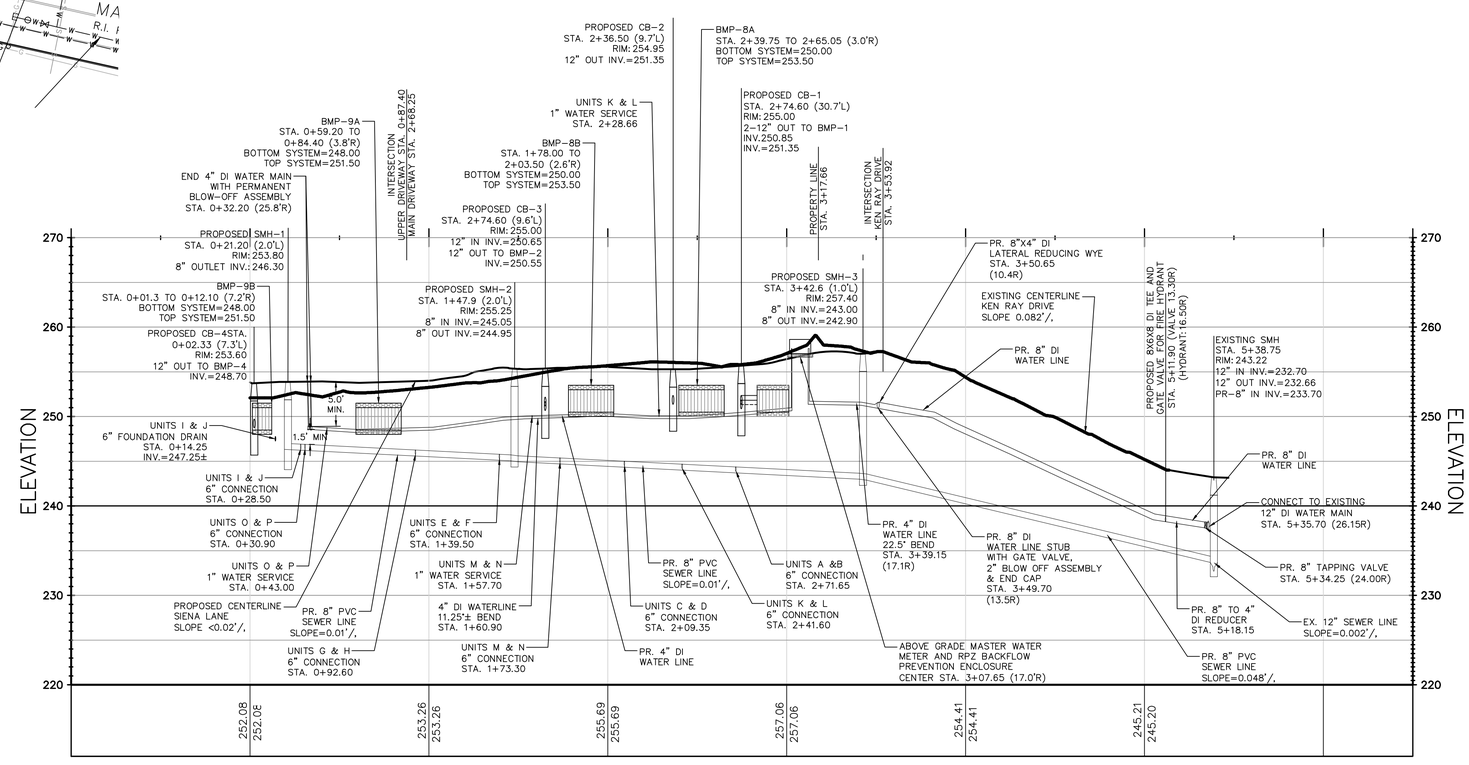

UPPER DRIVEWAY PROFILE

HORIZONTAL SCALE: 1" = 40'
VERTICAL SCALE: 1" = 8'

OWNER/APPLICANT:
BOULDER HILL DEVELOPMENT, LLC
PATRICK CZERWIEN, MANAGER
57 PINE RIDGE DRIVE
CRANSTON, RI 02921
PHONE: (401) 413-5648

LEGAL COUNCIL:
MR. THOMAS CRONIN ESQ.
NOLAN, BRUNERO, CRONIN & FERRARA LTD.
1070 MAIN STREET
COVENTRY, RI 02816-5707
PHONE: (401) 828-5800

DRAWING ISSUE:

- ☐ CONCEPT
- ☐ CUSTOMER APPROVAL
- ☒ PERMITTING
- ☐ CONSTRUCTION
- ☐ AS-BUILT
- ☐ OTHER:

ONLY PLANS ISSUED FOR CONSTRUCTION SHALL BE USED FOR CONSTRUCTION

TIMOTHY J. BEHAN
No. 6278
REGISTERED PROFESSIONAL ENGINEER
04/21/2026

COMMONWEALTH ENGINEERS & CONSULTANTS, INC.
400 SMITH STREET
PROVIDENCE, RHODE ISLAND 02908
(401) 273-6600

REVISIONS

No.	DATE	DRWN	CHKD
1	07-29-25	SMA	TJB
2	07-31-25	SMA	TJB
3	09-02-25	SMA	TJB
4	09-11-25	SMA	TJB
5	11-07-25	SMA	TJB
6	12-04-25	SMA	TJB
7	12-24-25	SMA	TJB
8	01-27-26	SMA	TJB
9	03-31-26	SMA	TJB
10	04-21-26	SMA	TJB

PRELIMINARY PLAN APPLICATION
COMPREHENSIVE PERMIT
FOR
SIENA CONDOMINIUMS
A.P. 45 LOTS 10, 11, 12 & 13
MAIN STREET
COVENTRY, RHODE ISLAND

PROPOSED ROADWAY PROFILE-1

SCALE: AS SHOWN		SHEET NO: 9 OF 20
DRAWN BY: SMA	DESIGN BY: SMA	CHECKED BY: TJB
DATE: MARCH 27, 2025		PROJECT NO.: 25024.00

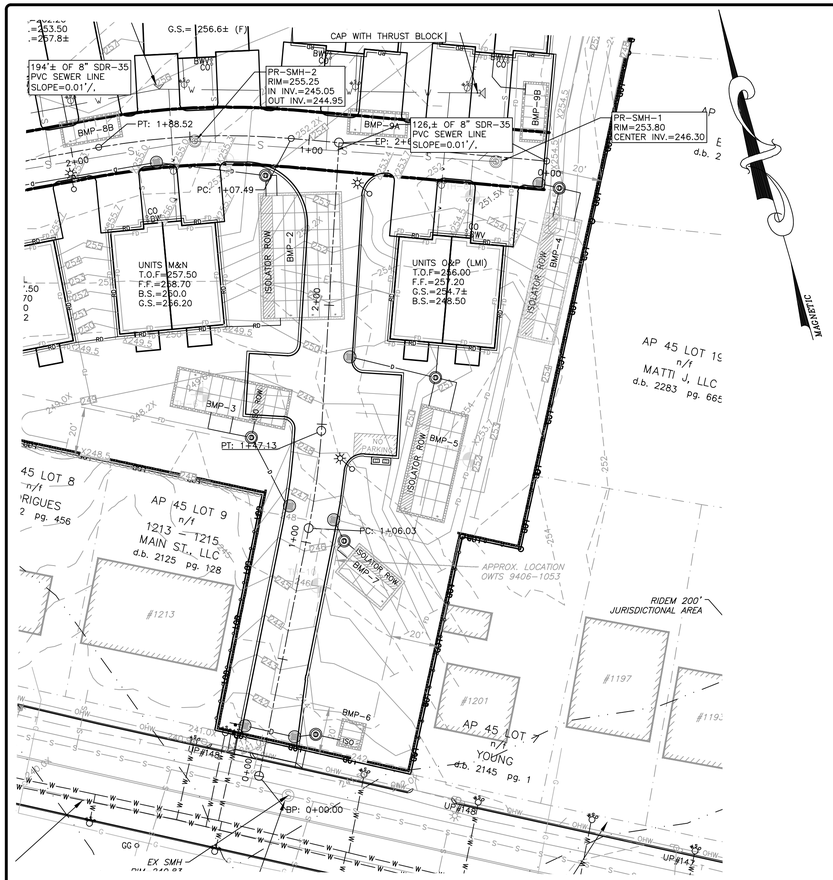

PLAN VIEW

GRAPHIC SCALE

30 0 15 30 60 120

(IN FEET)
1 inch = 30 ft.

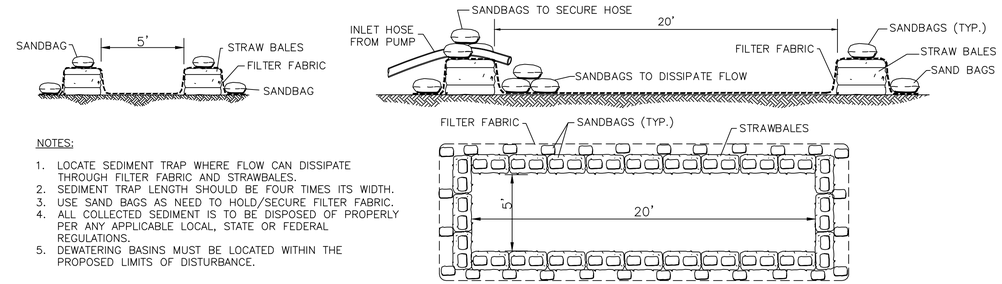

NOTES:

1. LOCATE SEDIMENT TRAP WHERE FLOW CAN DISSIPATE THROUGH FILTER FABRIC AND STRAWBALES.
2. SEDIMENT TRAP LENGTH SHOULD BE FOUR TIMES ITS WIDTH.
3. USE SAND BAGS AS NEED TO HOLD/SECURE FILTER FABRIC.
4. ALL COLLECTED SEDIMENT IS TO BE DISPOSED OF PROPERLY PER ANY APPLICABLE LOCAL, STATE OR FEDERAL REGULATIONS.
5. DEWATERING BASINS MUST BE LOCATED WITHIN THE PROPOSED LIMITS OF DISTURBANCE.

DEWATERING BASIN & SEDIMENT TRAP

NOT TO SCALE

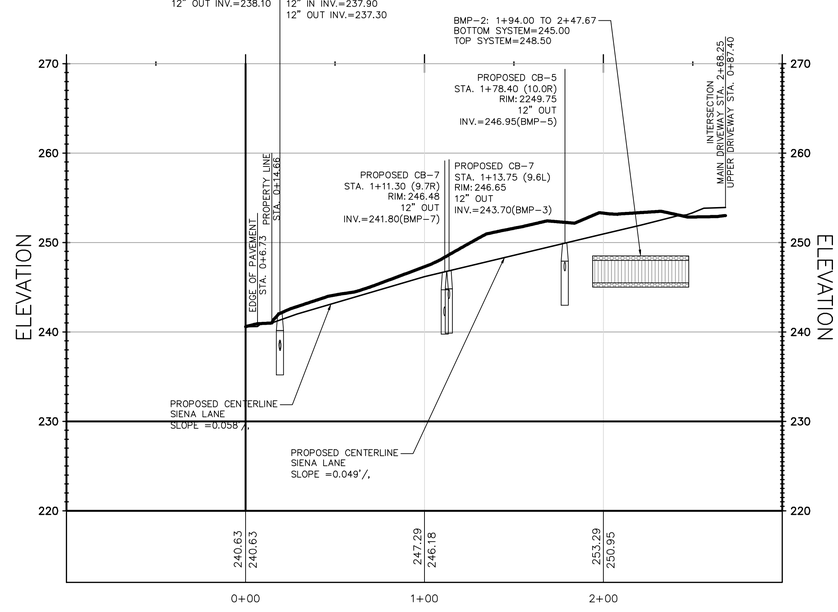

MAIN DRIVEWAY PROFILE

HORIZONTAL SCALE: 1" = 40'
VERTICAL SCALE: 1" = 8'

RIDOT R.O.W. NOTES:

1. ALL WORK TO BE PERFORMED WITHIN THE STATE HIGHWAY RIGHT OF WAY (R.O.W.) SHALL CONFORM TO THE RHODE ISLAND STANDARD SPECIFICATIONS FOR ROAD AND BRIDGE CONSTRUCTION, AUGUST 2023 EDITION WITH ALL REVISIONS. STANDARD DETAILS FOR THIS WORK ARE R.I. STANDARD DETAILS 1998 EDITION (AMENDED OCTOBER 2022) WITH ALL REVISIONS.
2. ALL TRAFFIC CONTROL SHALL CONFORM TO THE MANUAL ON UNIFORM TRAFFIC CONTROL DEVICES 2009, INCLUDING ALL REVISIONS.
3. CONTRACTOR MUST SUBMIT AN APPLICATION AND APPLY FOR SEPARATE UTILITY PERMIT FOR ALL UTILITY WORK TO BE PERFORMED IN THE RIDOT R.O.W.. THE APPROVAL OF THE PAPA IS NOT A SUBSTITUTE FOR A UTILITY PERMIT AND APPROVAL OF THE PAPA DOES NOT CONSTITUTE APPROVAL OF ANY UTILITY WORK, SHOWN OR UNSHOWN, WITHIN THE STATE R.O.W..
4. AS-BUILT DRAWINGS IDENTIFYING THE INVERTS, MATERIALS, AND PIPE SIZES FOR THE PROPOSED DRAINAGE CONNECTION SHALL BE PROVIDED TO RIDOT UPON COMPLETION OF THE WORK.

CONSTRUCTION NOTE:

1. THE CONTRACTOR SHALL CONTACT 'DIGSAFE' AT 1-888-344-7233 AT LEAST 72 HOURS PRIOR TO ANY EXCAVATION OR CONSTRUCTION.

OWNER/APPLICANT:
BOULDER HILL DEVELOPMENT, LLC
PATRICK CZERWIEN, MANAGER
57 PINE RIDGE DRIVE
CRANSTON, RI 02921
PHONE: (401) 413-5648

LEGAL COUNCIL:
MR. THOMAS CRONIN ESQ.
NOLAN, BRUNERO, CRONIN & FERRARA LTD.
1070 MAIN STREET
COVENTRY, RI 02816-5707
PHONE: (401) 828-5800

DRAWING ISSUE:

- ☐ CONCEPT
- ☐ CUSTOMER APPROVAL
- ☒ PERMITTING
- ☐ CONSTRUCTION
- ☐ AS-BUILT
- ☐ OTHER:

ONLY PLANS ISSUED FOR CONSTRUCTION SHALL BE USED FOR CONSTRUCTION

TIMOTHY J. BEHAN
No 6278
REGISTERED PROFESSIONAL ENGINEER
04/21/2026

REVISIONS

No.	DATE	DRWN	CHKD
1	07-29-25	SMA	TJB
2	07-31-25	SMA	TJB
3	09-02-25	SMA	TJB
4	09-11-25	SMA	TJB
5	11-07-25	SMA	TJB
6	12-04-25	SMA	TJB
7	12-24-25	SMA	TJB
8	01-27-26	SMA	TJB
9	03-31-26	SMA	TJB
10	04-21-26	SMA	TJB

COMMONWEALTH ENGINEERS & CONSULTANTS, INC.
400 SMITH STREET
PROVIDENCE, RHODE ISLAND 02908
(401) 273-6600

PRELIMINARY PLAN APPLICATION
COMPREHENSIVE PERMIT
FOR
SIENA CONDOMINIUMS
A.P. 45 LOTS 10, 11, 12 & 13
MAIN STREET
COVENTRY, RHODE ISLAND

PROPOSED ROADWAY PROFILE-2

SCALE: AS SHOWN		SHEET NO: 10 OF 20
DRAWN BY: SMA	DESIGN BY: SMA	CHECKED BY: TJB
DATE: MARCH 27, 2025		PROJECT NO.: 25024.00

PLAN VIEW

GRAPHIC SCALE

30 0 15 30 60 120

(IN FEET)
1 inch = 30 ft.

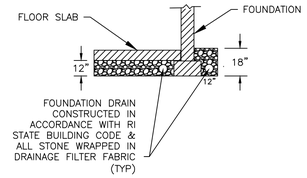

FOUNDATION DRAIN

NOT TO SCALE

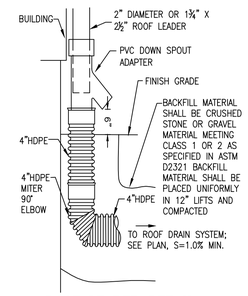

ROOF LEADER DETAIL

NOT TO SCALE

NOTE:
FOR PIPE BELOW A PAVED SURFACE: A MIN. OF 12" OF BACKFILL MATERIAL IS REQUIRED OVER THE TOP OF THE PIPE CROWN MEASURED FROM THE BOTTOM OF THE PAVEMENT. PIPE UNDER PAVEMENT SHALL BE SDR35 OR APPROVED EQUAL AND BEDDED IN ¾" CRUSHED STONE, 8" MIN. AROUND PIPE.

LEGEND

- PARCEL PROPERTY LINE
- ADJACENT PROPERTY LINE
- EXISTING RIGHT OF WAY LINE
- 40 — EXISTING MAJOR CONTOUR
- 27 — EXISTING MINOR CONTOUR
- G — EXISTING GAS LINE
- W — EXISTING WATER LINE
- S — EXISTING SEWER LINE
- GG — GAS VALVE BOX
- WV — WATER VALVE BOX
- CURB STOP
- UP-297 — UTILITY POLE AND NUMBER
- SMH — EXISTING SEWER MANHOLE
- COM-MH — EXISTING COMMUNICATIONS MANHOLE
- DMH — DRAINAGE MANHOLE
- DI/CB CB — CATCH BASIN OR DROP INLET
- X39.50 — EXISTING SPOT GRADE
- 40 — PROPOSED CONTOUR LINE
- X39.50 — PROPOSED SPOT GRADE
- EXISTING GUARD RAIL
- W — PROPOSED WATER LINE
- S — PROPOSED SEWER LINE
- BUILDING SETBACK LINE
- FIRE HYDRANT
- MW — MONITORING WELL
- EX. CHAIN LINK FENCE (HEIGHT VARIES)
- PROPOSED CHAIN LINK FENCE
- PERIMETER EROSION CONTROLS (COMPOST FILTER SOCK)
- TH-5 — TEST HOLE LOCATION
- BWV — BACKWATER VALVE
- CO — CLEANOUT
- FD — PROPOSED ROOF DRAIN (RD)
- RD — PROPOSED FOUNDATION DRAIN (FD)

OWNER/APPLICANT:
BOULDER HILL DEVELOPMENT, LLC
PATRICK CZERWIEN, MANAGER
57 PINE RIDGE DRIVE
CRANSTON, RI 02921
PHONE: (401) 413-5648

LEGAL COUNCIL:
MR. THOMAS CRONIN ESQ.
NOLAN, BRUNERO, CRONIN & FERRARA LTD.
1070 MAIN STREET
COVENTRY, RI 02816-5707
PHONE: (401) 828-5800

DRAWING ISSUE:

- ☐ CONCEPT
- ☐ CUSTOMER APPROVAL
- ☒ PERMITTING
- ☐ CONSTRUCTION
- ☐ AS-BUILT
- ☐ OTHER:

ONLY PLANS ISSUED FOR CONSTRUCTION SHALL BE USED FOR CONSTRUCTION

TIMOTHY J. BEHAN
No. 6278
REGISTERED PROFESSIONAL ENGINEER
04/21/2026

REVISIONS

No.	DATE	DRWN	CHKD
1	07-29-25	SMA	TJB
2	07-31-25	SMA	TJB
3	09-02-25	SMA	TJB
4	09-11-25	SMA	TJB
5	11-07-25	SMA	TJB
6	12-04-25	SMA	TJB
7	12-24-25	SMA	TJB
8	01-27-26	SMA	TJB
9	03-31-26	SMA	TJB
10	04-21-26	SMA	TJB

COMMONWEALTH
ENGINEERS & CONSULTANTS, INC.
400 SMITH STREET
PROVIDENCE, RHODE ISLAND 02908
(401) 273-6600

PRELIMINARY PLAN APPLICATION
COMPREHENSIVE PERMIT
FOR
SIENA CONDOMINIUMS
A.P. 45 LOTS 10, 11, 12 & 13
MAIN STREET
COVENTRY, RHODE ISLAND

PROPOSED ROOF & FOUNDATION DRAIN PLAN

SCALE: 1" = 30'		SHEET NO: 11 OF 20
DRAWN BY: SMA	DESIGN BY: SMA	CHECKED BY: TJB
DATE: MARCH 27, 2025		PROJECT NO.: 25024.00

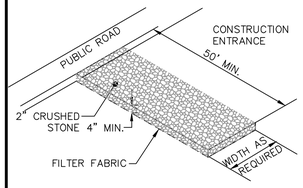

MATERIALS SIZE

SQUARE MESH SIEVES	2"CRUSHED STONE OR GRAVEL	ASTM C-33 NO. 2	ASTM C-33 NO. 3
	% FINER	% FINER	% FINER
2-1/2 INCHES	100	90-100	100
2 INCHES	95-100	35-70	90-100
1-1/2 INCHES	30-55	0-15	35-70
1-1/4 INCHES	0-25	–	–
1 INCH	0-5	–	0-15
3/4 INCH	–	0-5	–
1/2 INCH	–	–	0-5
3/8 INCH	–	–	–

NOTE:
STABILIZATION PAD TO BE IN CONFORMANCE WITH STANDARDS SET FORTH IN THE "RHODE ISLAND GUIDELINES FOR SOIL & SEDIMENT CONTROL."

RIP-RAP STABILIZATION PAD @ CONSTRUCTION ENTRANCE

NOT TO SCALE

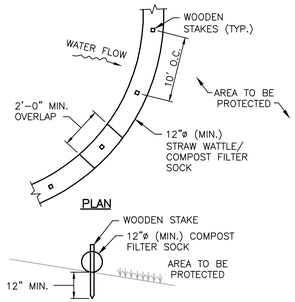

NOTES:
1. ALL MATERIAL TO MEET REQUIREMENTS OF SECTION 206 OF RI STANDARD SPECIFICATIONS.
2. SUBMIT SHOP DRAWING OF COMPOST MATERIAL FOR REVIEW AND APPROVAL PRIOR TO PLACEMENT.
3. COMPOST FILTER SOCK IS AN APPROVED "OR EQUAL" TO COMPOST FILTER BERM WHEN INSTALLED IN ACCORDANCE WITH THE TABLE BELOW:

MAXIMUM LENGTH ABOVE COMPOST FILTER SOCK (FEET) AND CORRESPONDING DIAMETER OF SOCK REQUIRED:

UPGRADIENT

SLOPE	8"ø	12"ø	18"ø	24"ø
2%	300'	375'	500'	650'
5%	200'	250'	275'	325'
10%	100'	125'	150'	200'
20%	50'	65'	70'	130'
30%	30'	40'	45'	85'
40%	30'	40'	45'	50'
50%	20'	25'	30'	35'

STRAW WATTLE/COMPOST FILTER SOCK

NOT TO SCALE

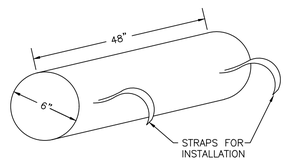

CURB INLET FILTER BY BMP SUPPLIES OR APPROVED EQUAL

CURB INLET PROTECTION

NOT TO SCALE

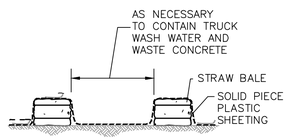

CONCRETE WASHOUT

NOT TO SCALE

GENERAL EROSION CONTROL NOTES:

1. THE STATE OF RHODE ISLAND STANDARD SPECIFICATIONS FOR ROAD AND BRIDGE CONSTRUCTION, 2004 EDITION, AND THE RHODE ISLAND STANDARD DETAILS ARE MADE A PART HEREOF AS FULLY AND COMPLETELY AS IF ATTACHED HERETO. THE 2004 STANDARD SPECIFICATIONS MAY BE OBTAINED AT THE RHODE ISLAND DEPARTMENT OF TRANSPORTATION WEB PAGE. THESE SPECIFICATIONS ARE MADE A PART HEREOF AS FULLY AND COMPLETELY AS IF ATTACHED HERETO.
2. ALL REQUIRED SITE IMPROVEMENTS SHALL BE INSPECTED BY THE TOWN ENGINEER TO ENSURE SATISFACTORY COMPLETION. IN NO CASE SHALL THE INSTALLATION OF ANY IMPROVEMENTS BE STARTED UNTIL PRIOR NOTIFICATION IS GIVEN TO THE city ENGINEER. AT LEAST A 48-HOUR NOTICE SHALL BE GIVEN TO THE TOWN ENGINEER PRIOR TO ANY SUCH START OF CONSTRUCTION. A FINAL INSPECTION OF ALL SITE IMPROVEMENTS, UTILITIES AND GRADING WILL BE MADE TO DETERMINE WHETHER THE WORK IS SATISFACTORY AND IN SUBSTANTIAL AGREEMENT WITH THE APPROVED FINAL CONSTRUCTION DRAWING AND THE TOWN SPECIFICATIONS.
3. LOCATION AND DEPTH OF EXISTING UTILITIES ARE APPROXIMATE AND HAVE BEEN PLOTTED FROM THE BEST AVAILABLE INFORMATION. THE CONTRACTOR SHALL CHECK AND VERIFY LOCATIONS OF ALL EXISTING UTILITIES BOTH UNDERGROUND AND OVERHEAD. ANY DAMAGE TO EXISTING UTILITIES AS SHOWN OR NOT SHOWN ON THE PLANS SHALL BE THE CONTRACTOR'S RESPONSIBILITY. COSTS OF SUCH DAMAGE SHALL BE BORNE BY THE CONTRACTOR. NO EXCAVATION SHALL BE DONE UNTIL ALL INVOLVED UTILITY COMPANIES ARE NOTIFIED 48-HOURS IN ADVANCE. THE CONTRACTOR SHALL BE RESPONSIBLE TO NOTIFY DIG-SAFE (1-800-344-7233) A MINIMUM OF 48 WORKING HOURS, EXCLUDING WEEKENDS AND HOLIDAYS, PRIOR TO THE START OF ANY EXCAVATION AND/OR BLASTING WORK. THE NAME OF THE COMPANY PERFORMING THE EXCAVATION AND/OR BLASTING WORK MUST BE SUPPLIED TO DIG-SAFE, IF IT IS DIFFERENT FROM THE CALLER.
4. IT SHALL BE THE CONTRACTOR'S SOLE RESPONSIBILITY TO OBTAIN ANY AND ALL PERMITS REQUIRED BY, BUT NOT LIMITED TO, THE STATE OF RHODE ISLAND, THE FEDERAL GOVERNMENT, LOCAL (TOWN/CITY) GOVERNMENT AND ALL INDIVIDUAL UTILITY COMPANIES PRIOR TO COMMENCING ANY WORK.
5. THE CONTRACTOR SHALL BE RESPONSIBLE FOR ESTABLISHING AND MAINTAINING ALL TEMPORARY SEDIMENTATION AND EROSION CONTROLS.
6. ALL MATERIAL FOR FILL SHALL BE CLEAN AND FREE OF MATTER WHICH COULD POLLUTE ANY DOWN STREAM WATERCOURSE.
7. FILL MATERIAL SHALL BE COMPACTED IN ONE FOOT (MAXIMUM) LIFTS TO AT LEAST 95% OF THE MAXIMUM DRY DENSITY AS DETERMINED IN ACCORDANCE WITH ASTM D-1557 (MODIFIED PROCTOR TEST).
8. ALL CONSTRUCTION SHALL BE PERFORMED IN ACCORDANCE WITH MANUFACTURER'S RECOMMENDATIONS.
9. ALL AREAS COMPACTED BY CONSTRUCTION ACTIVITIES SHALL BE RESTORED BY TILLING THE TOP 12" OF SOIL.

SEQUENCE AND STAGING OF LAND DISTURBING ACTIVITIES:

1. SURVEY AND STAKE LIMIT OF DISTURBANCE FOR PLACEMENT OF SEDIMENTATION CONTROL DEVICES.
2. PLACE PERIMETER SEDIMENTATION CONTROL DEVICES (STRAW WATTLE OR COMPOST FILTER SOCK). IN NO CASE SHALL THE LIMIT OF WORK EXTEND BEYOND THE SEDIMENTATION CONTROL DEVICES.
3. CONSTRUCT CONSTRUCTION ENTRANCE DEVICE 9.9.0.
4. CLEAR AND GRUB SITE, PERFORM DEMOLITION.
5. CONSTRUCT UTILITIES (ELECTRIC, WATER, SEWER, ETC..) AND ROUGH GRADE PARKING AREA.
6. EXCAVATE AND INSTALL BUILDING FOUNDATIONS, AND FLOOR SLABS.
7. CONSTRUCTION BUILDING.
8. INSTALL ASPHALT PARKING AREAS AND ADDITIONAL SITE IMPROVEMENTS
9. INSTALL LANDSCAPING. ALL DISTURBED AREAS SHALL BE LOAMED AND SEEDED WITH GRASS AT A MINIMUM.
10. REMOVE TEMPORARY EROSION AND SEDIMENT CONTROL DEVICES AFTER A PERMANENT GROWTH OF VEGETATION IS ESTABLISHED.

SOIL TYPE NAME	SOIL DESCRIPTION	HYDROLOGIC SOIL GROUP
HkC	HINCKLEY LOAMY SAND, 8 TO 15 PERCENT SLOPES	A
NaB	NARRAGANSETT SILT LOAM, 3 TO 8 PERCENT SLOPES	B
UD	UDORTHENTS-URBAN LAND COMPLEX	A
Ur	URBAN LAND	A-D

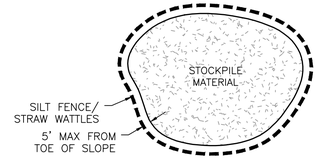

MATERIAL STOCKPILE DETAIL

NOT TO SCALE

STOCKPILE NOTES:

1. COVERINGS MUST BE SECURED AND INSPECTED DAILY AND REPAIRED/REPLACED AS NEEDED.
2. WORKING ENTRANCE TO STOCKPILE SHALL BE ON THE UP-GRADIENT SIDE OF THE STOCK PILE.
3. PERIMETER EROSION CONTROLS SHALL BE INSPECTED DAILY AND REPAIRED/REPLACED AS NEEDED.
4. CONTRACTOR TO DETERMINE STOCKPILE LOCATIONS.

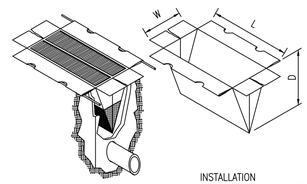

AS MANUFACTURED BY ACF ENVIRONMENTAL OR APPROVED EQUAL

INSTALLATION
* REMOVE DRAIN GRATE
* INSERT SILTSACK
* REMOVE FILLED SILTSACKS
* CLEAN AND REUSE

SILTSACK DETAIL

NOT TO SCALE

CONSTRUCTION NOTE:

1. THE CONTRACTOR SHALL CONTACT 'DIGSAFE' AT 1-888-344-7233 AT LEAST 72 HOURS PRIOR TO ANY EXCAVATION OR CONSTRUCTION.
2. OVERHEAD ELECTRIC AND TELECOMMUNICATION WIRES EXIST LESS THAN 4-FEET FROM EXISTING BUILDING.

EROSION CONTROL AND SOIL STABILIZATION PROGRAM:

1. TEMPORARY TREATMENTS SHALL CONSIST OF A STRAW, FIBER MULCH OR PROTECTIVE COVERS SUCH AS A MAT OR FIBER LINING (BURLAP, JUTE, FIBERGLASS NETTING, EXCELSIOR BLANKETS). THEY SHALL BE INCORPORATED INTO THE WORK AS WARRANTED OR AS ORDERED BY THE ENGINEER.
2. STRAW APPLICATIONS SHOULD BE IN THE AMOUNT OF 2000 LBS/ACRE.
3. ALL STRAW BALES OR TEMPORARY PROTECTION SHALL REMAIN IN-PLACE UNTIL AN ACCEPTABLE STAND OF GRASS OR APPROVED GROUND COVER IS ESTABLISHED.
4. THE TOPSOIL SHALL HAVE A SANDY LOAM TEXTURE RELATIVELY FREE OF SUBSOIL MATERIAL, STONES, ROOTS, LUMPS OF SOIL, TREE LIMBS, TRASH OR CONSTRUCTION DEBRIS AND SHALL CONFORM WITH RHODE ISLAND STANDARD SPECIFICATION M.20.01, AS AMENDED.
5. THE SEED MIX SHALL BE INOCULATED WITHIN 24-HOURS BEFORE MIXING AND PLANTING, WITH APPROPRIATE INOCULUM FOR EACH VARIETY.
6. THE DESIGN MIX UTILIZED IN ALL DISTURBED AREAS TO BE SEEDED SHALL BE COMPRISED OF THE FOLLOWING:

TYPE	% BY WEIGHT	SEEDING DATE
CREEPING RED FESCUE	70	APRIL 1 – JUNE 15
ASTORIA BENTGRASS	5	AUGUST 15 – OCT.
BIRDFOOT TREEFOIL	15	
PERENNIAL RYEGRASS	10	

APPLICATION RATE 100 LBS/ACRE
LIMING AND FERTILIZING AS REQUIRED TO COMPLIMENT OR UPGRADE EXISTING CONDITIONS.

7. THE CONTRACTOR MUST REPAIR AND/OR RESEED ANY AREAS THAT DO NOT DEVELOP WITHIN THE PERIOD OF ONE YEAR, AND SHALL DO SO AT NO ADDITIONAL EXPENSE.
8. THE NORMAL ACCEPTABLE SEASONAL SEEDING DATES ARE APRIL 1ST THROUGH OCTOBER 15TH.
9. STABILIZATION OF ONE FORM OR ANOTHER AS DESCRIBED ABOVE SHALL BE ACHIEVED WITHIN FIFTEEN (15) DAYS OF FINAL GRADING.
10. STOCKPILES OF TOPSOIL AND EARTH MATERIALS SHALL NOT BE LOCATED NEAR WATERWAYS. THEY SHALL HAVE SIDE SLOPES NO GREATER THAN THIRTY PERCENT (30%) AND STOCKPILE SHALL ALSO BE SEEDED AND/OR STABILIZED.
11. ON BOTH STEEP AND LONG SLOPES, CONSIDERATION SHOULD BE GIVEN TO "CRIMPING" OR "TRACKING" TO TACK DOWN MULCH APPLICATIONS.
12. TREES TO BE RETAINED SHALL BE FENCED OR ROPED OFF TO PROTECT THEM FROM CONSTRUCTION EQUIPMENT.
13. ALL PROPOSED PLANTINGS MUST BE ACCOMPLISHED AS EARLY AS POSSIBLE UPON COMPLETION OF GRADING AND CONSTRUCTION, AND AT LEAST PRIOR TO ANY ON-SITE OCCUPANCY.
14. ALL PROPOSED PLANTINGS MUST BE MAINTAINED BY THE PROPERTY OWNER TO ENSURE SURVIVAL.
15. SHOULD ANY OR ALL OF THE PROPOSED PLANTS FAIL TO SURVIVE AT LEAST ONE (1) FULL GROWING SEASON FROM THE TIME THEY HAVE BEEN PLANTED, THE OWNER SHALL BE FULLY RESPONSIBLE FOR REPLACING AND MAINTAINING THE SAME PLANT SPECIES FOR ONE (1) ADDITIONAL GROWING SEASON.
16. ALL DISTURBED AREAS MUST BE SEEDED OR PLANTED WITHIN THE CONSTRUCTION SEASON.
17. TEMPORARY SEEDING MUST BE DONE WITHIN ONE (1) MONTH AFTER DISTURBANCE.
18. ALL DISTURBED AREAS MUST BE PERMANENTLY SEEDED OR PLANTED BEFORE OCTOBER 1ST, IF NOT THEY MUST BE TEMPORARILY SEEDED.
19. SLOPES CONSTRUCTED AT, OR STEEPER THAN, 15% SHALL HAVE TEMPORARY EROSION CONTROL MATTING UTILIZED AS A SUPPORTIVE METHOD IN ADDITION TO THE METHODS DESCRIBED ABOVE.
20. ALL PROPOSED INLETS AND OUTLETS SHALL BE PROTECTED WITH RIPRAP BOTH TEMPORARILY AND PERMANENTLY. SEE DETAIL.

ALL CONSTRUCTION SHALL BE IN ACCORDANCE WITH THE STANDARDS AND PROCEDURES SET FORTH IN THE TOWN SUBDIVISION REGULATIONS AND ZONING ORDINANCES; RHODE ISLAND STORMWATER DESIGN AND INSTALLATION STANDARDS MANUAL DEC. 2010 AS PREPARED BY THE RIDEM AND CRMC; AND RHODE ISLAND EROSION AND SEDIMENT CONTROL HANDBOOK AS PREPARED BY RHODE ISLAND STATE CONSERVATION COMMITTEE, REVISED 2014, (AS REVISED).

23. INFILTRATION PRACTICES SHALL NEVER SERVE AS A SEDIMENT CONTROL DEVICE DURING SITE CONSTRUCTION PHASE. GREAT CARE MUST BE TAKEN TO PREVENT ANY INFILTRATION AREA FROM COMPACTION BY MARKING OFF THE LOCATION BEFORE THE START OF CONSTRUCTION AT THE SITE AND CONSTRUCTING THE INFILTRATION PRACTICE LAST, CONNECTING UPSTREAM DRAINAGE AREAS ONLY AFTER CONSTRUCTION IS COMPLETE, AND THE CONTRIBUTING AREA IS STABILIZED. THE CONTRACTOR SHALL SUBMIT A PLAN TO THE TOWN (FOR APPROVAL) HOW SEDIMENT WILL BE PREVENTED FROM ENTERING THE SITE OF AN INFILTRATION FACILITY.
24. EXTREME CARE SHALL BE EXERCISED AS TO PREVENT ANY MATERIALS FROM ENTERING WETLANDS, THE ROADWAYS, ROADWAY DRAINAGE SYSTEMS, AND ADJACENT PROPERTY.
25. STAKED STRAW BALES OR SILT FENCE SHALL BE INSTALLED WHERE SHOWN ON THE PLAN AND AS REQUIRED TO PREVENT SEDIMENTATION ONTO ADJACENT PROPERTIES, WETLANDS AND THE ROADWAY DRAINAGE SYSTEM.
26. DENUDED SLOPES SHALL NOT BE UNATTENDED OR EXPOSED FOR MORE THAN 2 WEEKS OF TIME OR FOR THE INACTIVE WINTER SEASON.
27. NO UNDISTURBED AREAS SHALL BE CLEARED OF EXISTING VEGETATION AFTER OCTOBER 15 OF ANY CALENDAR YEAR OR DURING ANY PERIOD OF FULL OR LIMITED WINTER SHUTDOWN. ALL DISTURBED SOILS EXPOSED PRIOR TO OCTOBER 15 OF ANY CALENDAR YEAR SHALL BE SEEDED OR PROTECTED BY THAT DATE. ANY SUCH AREAS THAT DO NOT HAVE ADEQUATE VEGETATIVE STABILIZATION, AS DETERMINED BY THE RESIDENT ENGINEER OR ENVIRONMENTAL INSPECTOR, BY NOVEMBER 15 OF ANY CALENDAR YEAR, MUST BE STABILIZED THROUGH THE USE OF EROSION CONTROL MATTING OR STRAW MULCH, IN ACCORDANCE WITH SPECIFICATIONS CONTAINED WITHIN THE R.I. SOIL EROSION AND SEDIMENT CONTROL HANDBOOK. IF WORK CONTINUES WITHIN ANY OF THESE AREAS DURING THE PERIOD FROM OCTOBER 15 THROUGH APRIL 15, CARE MUST BE TAKEN TO ENSURE THAT ONLY THE AREA REQUIRED FOR THAT DAY'S WORK IS EXPOSED, AND ALL ERODIBLE SOIL MUST BE RESTABILIZED WITHIN 5 WORKING DAYS. ANY WORK TO CORRECT PROBLEMS RESULTING FROM FAILURE TO COMPLY WITH THIS PROVISION SHALL BE THE RESPONSIBILITY OF THE CONTRACTOR. THERE WILL BE NO SEPARATE PAYMENT FOR THIS PROVISION, IT SHALL BE CONSIDERED INCIDENTAL TO CONSTRUCTION OPERATIONS. STABILIZATION OF ONE FORM OR ANOTHER AS DESCRIBED ABOVE SHALL BE ACHIEVED WITHIN 2 WEEKS OF FINAL GRADING.
28. PREPARE TEMPORARY SEEDING AREA, PROVIDE AND PLANT SEED IN ACCORDANCE WITH 'RHODE ISLAND EROSION AND SEDIMENT CONTROL HANDBOOK" AS PREPARED BY THE RHODE ISLAND STATE CONSERVATION COMMITTEE, REVISED 2014, (AS REVISED).

SEED MIX:
ANNUAL RYE GRASS 1.5 LBS/1,000 SQ. FT.

29. TEMPORARY TREATMENTS TO STABILIZE EXPOSED SOILS SHALL CONSIST OF STRAW OR FIBER MULCH OR PROTECTIVE COVERS, SUCH AS A MAT OR FIBER LINING (BURLAP, JUTE, FIBERGLASS NETTING, EXCELSIOR BLANKETS). THEY SHALL BE INCORPORATED INTO THE WORK WHEN SOILS ARE EXPOSED FOR TWO WEEKS OR MORE OR AS ORDERED BY THE TOWN, ENGINEER OR OWNER AT NO ADDITIONAL COST.
30. STRAW APPLICATIONS SHALL BE IN THE AMOUNT OF 3,000-4,000 LBS/ACRE.
31. ALL NEW STRAW BALES OR TEMPORARY PROTECTION SHALL REMAIN IN PLACE UNTIL AN ACCEPTABLE STAND OF GRASS OR APPROVED GROUND COVER IS ESTABLISHED AND POTENTIAL SEDIMENTATION SOURCES ARE REMOVED.
32. STOCKPILES SHALL HAVE NO SLOPE GREATER THAN 2:1 AND SHALL BE SURROUNDED BY STAKED STRAW BALES OR SILT FENCE. STOCKPILES EXPOSED FOR EXCESSIVE PERIODS OF TIME SHALL RECEIVE TEMPORARY TREATMENT CONSISTING OF PLANTING ANNUAL RYE GRASS OR PROTECTING WITH STRAW OR FIBER MATTING.
33. DURING CONSTRUCTION, THE CONTRACTOR SHALL BE RESPONSIBLE FOR ALL EROSION CONTROL MAINTENANCE AND SHALL INSPECT/REPLACE AS NEEDED.
34. ADDITIONAL STRAW BALES/SILT FENCE OR OTHER TREATMENTS SHALL BE PROVIDED AS DIRECTED BY ENGINEER, RIDEM OR LOCAL REPRESENTATIVES AT NO ADDITIONAL COST.
35. THE CONTRACTOR SHALL INSPECT THE SOIL EROSION CONTROL DEVICES AFTER EVERY RAIN STORM EVENT AND EVERY 7 DAYS (WHICH EVER COMES FIRST). ANY SOIL MIGRATION PAST THE DEVICES SHALL BE REMOVED AND THE SOIL EROSION CONTROL DEVICES SHALL BE RE-ESTABLISHED TO PREVENT SOIL EROSION. ALL ACCUMULATED SEDIMENT IN FRONT OF THE DEVICES SHALL BE REMOVED AFTER EVERY RAIN STORM EVENT.
36. ALL DISTURBED SOIL AREAS SHALL BE PROTECTED AGAINST SOIL EROSION BY PLACEMENT OF STRAW BALES AND/OR SILT FENCE ON THE DOWN GRADIENT SIDE OF THE DISTURBED AREA(S). SHOULD THE VOLUME AND/OR RATE OF STORMWATER RUNOFF BE TOO GREAT FOR A SINGLE DEVICE, THEN MULTIPLE DEVICES ARE REQUIRED SUCH AS SILT FENCE BACKED-UP WITH STRAW BALES. THESE ADDITIONAL DEVICES ARE NOT SHOWN ON THE PLAN BUT SHALL BE PROVIDED AND INSTALLED BY THE CONTRACTOR AT NO ADDITIONAL COST TO THE OWNER.
37. AT THE END OF THE PROJECT ALL SEDIMENT IN MANHOLE SUMPS SHALL BE REMOVED.

SESC NOTES

1. CONTRACTOR TO DETERMINE SOIL STOCKPILE AREAS
2. CONTRACTOR TO DETERMINE CONCRETE WASHOUT AREAS.

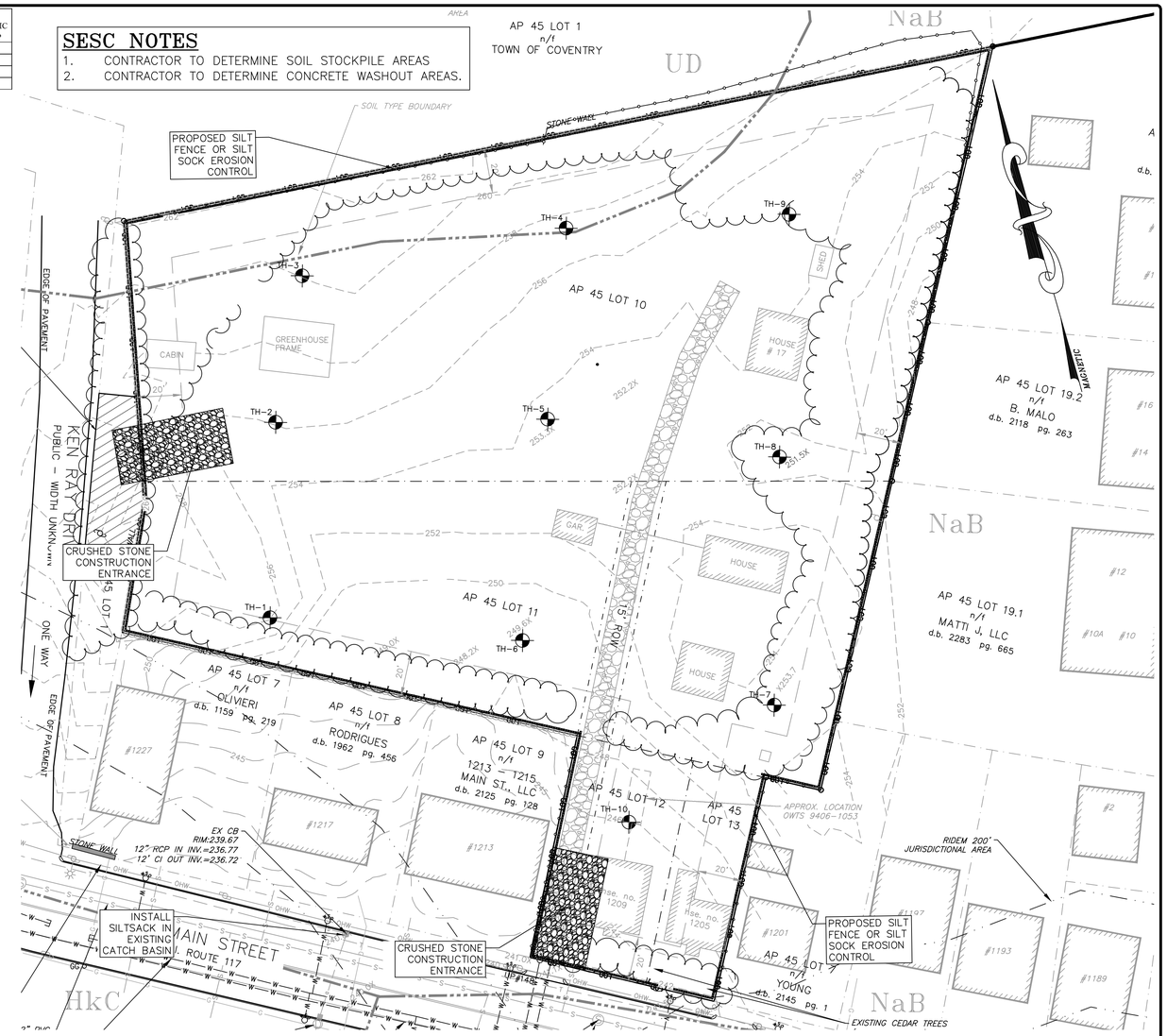

PLAN VIEW

GRAPHIC SCALE

30 0 15 30 60 120

(IN FEET)
1 inch = 30 ft.

SEDIMENTATION CONTROL PROGRAM:

1. EXTREME CARE SHALL BE EXERCISED SO AS TO PREVENT ANY UNSUITABLE MATERIAL FROM ENTERING DOWNSTREAM WATERCOURSES AND STORMWATER DRAINAGE SYSTEMS.
2. DURING CONSTRUCTION, THE CONTRACTOR AND/OR DEVELOPER SHALL BE RESPONSIBLE FOR MAINTAINING DRAINAGE AND RUN-OFF FLOW DURING STORMS.
3. SEDIMENTATION CONTROL DEVICES SHALL BE INSPECTED CLOSELY AND MAINTAINED PROMPTLY AFTER EACH RAINFALL.
4. CARE SHALL BE TAKEN SO AS NOT TO PLACE "REMOVED SEDIMENTS" WITHIN THE PATH OF EXISTING, NEWLY CREATED (BOTH TEMPORARY AND PERMANENT) OR PROPOSED WATERCOURSES OR THOSE AREAS SUBJECTED TO STORMWATER FLOWAGE.
5. ADDITIONAL STRAW BALES OR SANDBAGS SHALL BE LOCATED AS CONDITIONS WARRANT OR AS DIRECTED BY THE ENGINEER..
6. EROSION AND SEDIMENTATION CONTROLS SHALL BE INSTALLED AT THE SITE PRIOR TO THE START OF CONSTRUCTION AND BE PROPERLY MAINTAINED UNTIL ALL DISTURBED AREAS ARE STABILIZED INCLUDING:
7. ALL DISTURBED AREAS ARE TO BE PERMANENTLY STABILIZED WITH
8. APPROVED GROUND COVER PRIOR TO THE COMPLETION OF THE PROJECT. AREAS EXPOSED FOR EXTENDED PERIODS ARE TO BE COMPLETELY COVERED WITH SPREAD STRAW MULCH.
9. ALL CONTROL MEASURES WILL BE MAINTAINED IN EFFECTIVE CONDITION THROUGHOUT THE CONSTRUCTION PERIOD.
10. THE LIMITS OF ALL CLEARING, GRADING AND DISTURBANCE SHALL BE KEPT TO A MINIMUM WITHIN THE PROPOSED AREA OF CONSTRUCTION. ALL AREAS OUTSIDE OF THE LIMITS OF DISTURBANCE SHALL REMAIN TOTALLY UNDISTURBED.
11. INSPECT TEMPORARY DIVERSIONS AND THEIR COMPONENTS ONCE A WEEK AND AFTER EVERY RAINFALL. DAMAGE CAUSED BY CONSTRUCTION TRAFFIC OR OTHER ACTIVITY SHOULD BE REPAIRED BEFORE THE END OF EACH WORKING DAY.

DRAWING ISSUE:
- ☐ CONCEPT
- ☐ CUSTOMER APPROVAL
- ☒ PERMITTING
- ☐ CONSTRUCTION
- ☐ AS-BUILT
- ☐ OTHER:

ONLY PLANS ISSUED FOR CONSTRUCTION SHALL BE USED FOR CONSTRUCTION

OWNER/APPLICANT:
BOULDER HILL DEVELOPMENT, LLC
PATRICK CZERWIEN, MANAGER
57 PINE RIDGE DRIVE
CRANSTON, RI 02921
PHONE: (401) 413-5648

LEGAL COUNCIL:
MR. THOMAS CRONIN ESQ.
NOLAN, BRUNERO, CRONIN & FERRARA LTD.
1070 MAIN STREET
COVENTRY, RI 02816-5707
PHONE: (401) 828-5800

TIMOTHY J. BEHAN
No. 6278
REGISTERED PROFESSIONAL ENGINEER
04/21/2026

REVISIONS

No.	DATE	DRWN	CHKD
1	07-29-25	SMA	TJB
2	07-31-25	SMA	TJB
3	09-02-25	SMA	TJB
4	09-11-25	SMA	TJB
5	11-07-25	SMA	TJB
6	12-04-25	SMA	TJB
7	12-24-25	SMA	TJB
8	01-27-26	SMA	TJB
9	03-31-26	SMA	TJB
10	04-21-26	SMA	TJB

COMMONWEALTH ENGINEERS & CONSULTANTS, INC.
400 SMITH STREET
PROVIDENCE, RHODE ISLAND 02908
(401) 273-6600

PRELIMINARY PLAN APPLICATION
COMPREHENSIVE PERMIT
FOR
SIENA CONDOMINIUMS
A.P. 45 LOTS 10, 11, 12 & 13
MAIN STREET
COVENTRY, RHODE ISLAND

SOIL EROSION AND SEDIMENT CONTROL PLAN

SCALE: AS SHOWN		SHEET NO: 12 OF 20
DRAWN BY: SMA	DESIGN BY: SMA	CHECKED BY: TJB
DATE: MARCH 27, 2025		PROJECT NO.: 25024.00

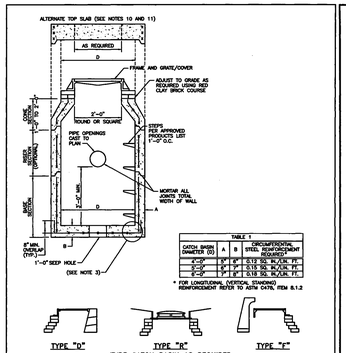

TABLE 1			
CATCH BASIN DIAMETER (D)	A	B	CIRCUMFERENTIAL STEEL REINFORCEMENT REQUIRED*
2'-0"	9"	9"	0.12 SQ. IN./LIN. FT.
3'-0"	9"	9"	0.18 SQ. IN./LIN. FT.
4'-0"	12"	12"	0.18 SQ. IN./LIN. FT.

* FOR LONGITUDINAL (VERTICAL STANDING) REINFORCEMENT REFER TO ASTM C478, ITEM 8.1.2

TYPE CATCH BASIN AS REQUIRED

NOTES:
1. SHALL BE IN ACCORDANCE WITH SECTION 702 OF THE R.I. STANDARD SPECIFICATIONS.
2. SEE TABLE 1 FOR STEEL REINFORCEMENT REQUIREMENTS.
3. STEEL REINFORCEMENT FOR BASE SECTION BOTTOM SHALL BE A MINIMUM OF 0.12 SQ. IN./LIN. FT. (BOTH WAYS).
4. STEPS SHALL CONFORM TO STD. 5.3.0 AND SHALL BE INSTALLED AT THE CASTING PLANT.
5. ONE POUR MONOLITHIC BASE SECTION.
6. ANY NECESSARY ADJUSTMENTS DURING CONSTRUCTION WILL BE DONE BY SAW-CUTTING AND/OR CORING ONLY, NO JACKHAMMERS, HAMMERS AND CHISELS OR PNEUMATIC TOOLS WILL BE ALLOWED.
7. CORBEL MADE OF RED CLAY BRICK WILL BE PERMITTED FOR THE "CORE SECTION" OF THE 4'-0" CATCH BASIN ONLY.
8. FOR CATCH BASIN TYPES "R" AND "F" STEPS MUST BE PROVIDED ON THE CURB SIDE OF THE STRUCTURE.
9. REFER TO STD. 5.2.0 FOR MINIMUM PIPE SIZES.
10. ALTERNATE TOP SLAB IS STED. REINFORCED TO MEET OR EXCEED H-25 LOADING (SEE STD. 4.7.2).
11. ALTERNATE TOP SLAB IS ONLY FOR USE WHEN REDUCING SECTION DOES NOT FIT BECAUSE OF STRUCTURE DEPTH.
12. REFER TO STD. 5.3.0 FOR MAXIMUM PIPE SIZES.

RHODE ISLAND DEPARTMENT OF TRANSPORTATION

REVISIONS: NO. | BY | DATE

PRECAST 4'-0", 5'-0", OR 6'-0" ROUND CATCH BASIN

CHIEF ENGINEER TRANSPORTATION — CHIEF DESIGN ENGINEER TRANSPORTATION — JUNE 15, 1998 ISSUE DATE

R.I. STANDARD 4.4.0

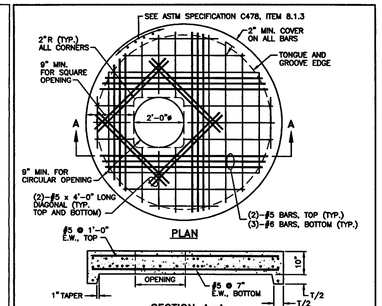

NOTES:
1. SHALL BE IN ACCORDANCE WITH SECTION 702 OF THE R.I. STANDARD SPECIFICATIONS.
2. ANY NECESSARY ADJUSTMENTS DURING CONSTRUCTION WILL BE DONE BY SAW-CUTTING AND/OR CORING ONLY, NO JACKHAMMERS, HAMMERS AND CHISELS OR PNEUMATIC TOOLS WILL BE ALLOWED.
3. THE CENTER LINE OF THE OPENING MUST BE WITHIN 2" FROM THE STEPS.
4. ALTERNATE TOP COVER IS STEEL REINFORCED TO MEET OR EXCEED H-25 OR HS-25 LOADINGS WITH EARTH PRESSURES INCLUDED. THIS IMPLIES THAT THE TOP SLAB IS DESIGNED FOR AXLE LOADS OF NO MORE THAN 20 TONS.
5. ALL REBAR SHALL HAVE A MINIMUM OF 2" CLEARANCE FROM OPENING.
6. ALL REBARS IN THE BOTTOM MAT ARE #5 @ 2", BOTH WAYS, WITH 2" MINIMUM COVER, EXCEPT FOR REBARS ADJACENT TO THE OPENING. THESE BARS SHALL BE (3)-#6 SHOWN WITH A HEAVIER LINE FOR CLARITY). REBARS IN THE TOP MAT ARE #5 @ 1'-0", BOTH WAYS, WITH 2" MINIMUM COVER, EXCEPT FOR REBARS ADJACENT TO THE OPENING. THESE BARS SHALL BE (2)-#5 BARS.

RHODE ISLAND DEPARTMENT OF TRANSPORTATION

REVISIONS: NO. | BY | DATE

ALTERNATE TOP COVER FOR ROUND PRECAST MANHOLES AND CATCH BASINS

CHIEF ENGINEER TRANSPORTATION — CHIEF DESIGN ENGINEER TRANSPORTATION — JUNE 15, 1998 ISSUE DATE

R.I. STANDARD 4.7.2

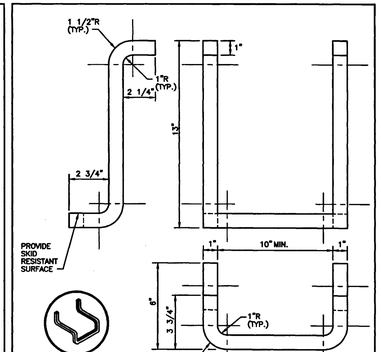

NOTES:
1. STEPS SHALL CONFORM TO SECTION M.04 OF THE R.I. STANDARD SPECIFICATIONS.
2. CROSS SECTION AREA MAY BE REDUCED UPON SUBMISSION OF CERTIFIED LOAD TESTS. STEPS MUST SUPPORT 300 LBS.
3. STOCK SHOWN IS 1" SQUARE WHICH MAY BE REPLACED BY 1" DIAMETER.

RHODE ISLAND DEPARTMENT OF TRANSPORTATION

REVISIONS: NO. | BY | DATE

CATCH BASIN AND MANHOLE STEP

CHIEF ENGINEER TRANSPORTATION — CHIEF DESIGN ENGINEER TRANSPORTATION — JUNE 15, 1998 ISSUE DATE

R.I. STANDARD 5.3.0

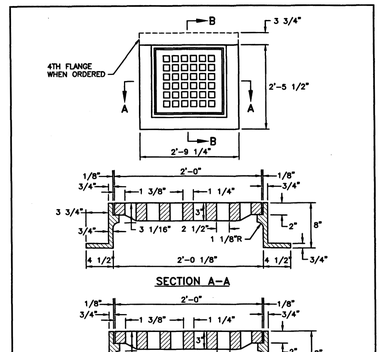

NOTE:
FRAME AND GRATE SHALL CONFORM TO SECTION M.04 OF THE R.I. STANDARD SPECIFICATIONS.

RHODE ISLAND DEPARTMENT OF TRANSPORTATION

REVISIONS: NO. | BY | DATE

SQUARE FRAME AND GRATE

CHIEF ENGINEER TRANSPORTATION — CHIEF DESIGN ENGINEER TRANSPORTATION — JUNE 15, 1998 ISSUE DATE

R.I. STANDARD 6.3.0

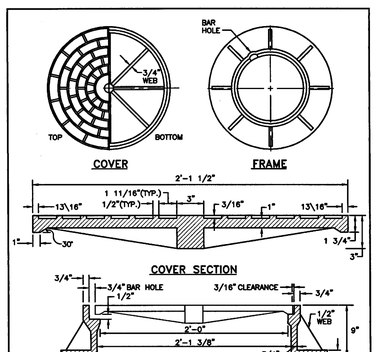

NOTES:
1. FRAME AND GRATE SHALL CONFORM TO SECTION M.04 OF THE R.I. STANDARD SPECIFICATIONS.
2. FRAME AND COVER SEATS MUST HAVE MACHINE FINISH.

RHODE ISLAND DEPARTMENT OF TRANSPORTATION

REVISIONS: NO. | BY | DATE

HEAVY-DUTY ROUND FRAME AND COVER

CHIEF ENGINEER TRANSPORTATION — CHIEF DESIGN ENGINEER TRANSPORTATION — JUNE 15, 1998 ISSUE DATE

R.I. STANDARD 6.2.1

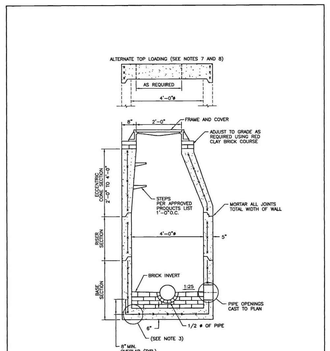

NOTES:
1. SHALL BE IN ACCORDANCE WITH SECTION 702 OF THE R.I. STANDARD SPECIFICATIONS.
2. CIRCUMFERENTIAL STEEL REINFORCEMENT REQUIRED = 0.12 SQ. IN. / LIN. FT. MINIMUM.
3. STEEL REINFORCEMENT FOR BASE SECTION BOTTOM SHALL BE A MINIMUM OF 0.12 SQ. IN./LIN. FT. (BOTH WAYS).
4. ONE POUR MONOLITHIC BASE SECTION.
5. ANY NECESSARY ADJUSTMENTS DURING CONSTRUCTION WILL BE DONE BY SAW-CUTTING AND/OR CORING ONLY, NO JACKHAMMERS, HAMMERS AND CHISELS OR PNEUMATIC TOOLS WILL BE ALLOWED.
6. STEPS SHALL CONFORM TO STD. 5.3.0 AND SHALL BE INSTALLED AT THE CASTING PLANT.
7. ALTERNATE TOP SLAB IS STEEL REINFORCED TO MEET OR EXCEED H-25 LOADING (SEE STD. 4.7.2).
8. ALTERNATE TOP SLAB IS ONLY FOR USE WHEN REDUCING SECTION DOES NOT FIT BECAUSE OF STRUCTURE DEPTH.
9. REFER TO STD. 5.2.0 FOR MAXIMUM PIPE SIZES.

RHODE ISLAND DEPARTMENT OF TRANSPORTATION

REVISIONS: NO. | BY | DATE

PRECAST 4'-0" ROUND MANHOLE

CHIEF ENGINEER TRANSPORTATION — CHIEF DESIGN ENGINEER TRANSPORTATION — JUNE 15, 1998 ISSUE DATE

R.I. STANDARD 4.2.0

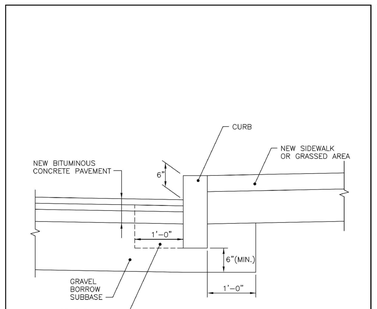

NOTES:
1. SHALL BE IN ACCORDANCE WITH SECTION 906 OF THE R.I. STANDARD SPECIFICATIONS.
2. CEMENT CONCRETE SHALL BE USED ONLY WHEN THE CURB IS SET AFTER THE BASE AND/OR BINDER COURSES ARE IN PLACE, OTHERWISE THE CEMENT CONCRETE WILL BE ELIMINATED AND THE GRAVEL BROUGHT UP TO BOTTOM OF THE BASE COURSE.

RHODE ISLAND DEPARTMENT OF TRANSPORTATION

REVISIONS: NO. | BY | DATE — 1 | MLP | Mar 05

CURB SETTING DETAIL

CHIEF ENGINEER TRANSPORTATION — CHIEF DESIGN ENGINEER TRANSPORTATION — JUNE 15, 1998 ISSUE DATE

R.I. STANDARD 7.6.0

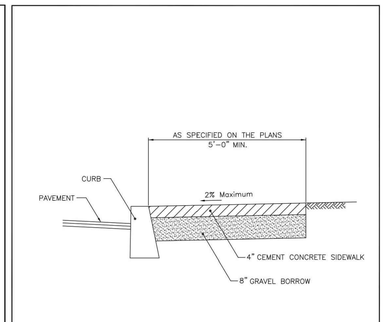

NOTES
1. SHALL BE IN ACCORDANCE WITH SECTION 905 OF THE R.I. STANDARD SPECIFICATIONS.
2. FOR CURB SETTING DETAIL REFERENCE STD. 7.6.0.

RHODE ISLAND DEPARTMENT OF TRANSPORTATION

REVISIONS: NO. | BY | DATE — 1 | MLP | 3/17/05 — 2 | MLP | 06/01/10

CEMENT CONCRETE SIDEWALK

CHIEF ENGINEER TRANSPORTATION — CHIEF DESIGN ENGINEER TRANSPORTATION — JUNE 15, 1998 ISSUE DATE

R.I. STANDARD 43.1.0

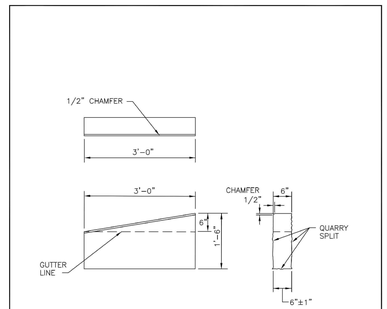

NOTES:
1. SHALL BE IN ACCORDANCE WITH SECTION 906 OF THE R.I. STANDARD SPECIFICATIONS.
2. TOP SURFACE TO BE DRESSED BY SAW. REMAINDER MAY BE QUARRY SPLIT.

RHODE ISLAND DEPARTMENT OF TRANSPORTATION

REVISIONS: NO. | BY | DATE — 1 | MLP | Mar 2005 — 2 | MLP | Sep 2012 — 3 | MLP | Sep 2012

3'-0" GRANITE TRANSITION CURB

CHIEF ENGINEER TRANSPORTATION — CHIEF DESIGN ENGINEER TRANSPORTATION — JUNE 15, 1998 ISSUE DATE

R.I. STANDARD 7.3.1

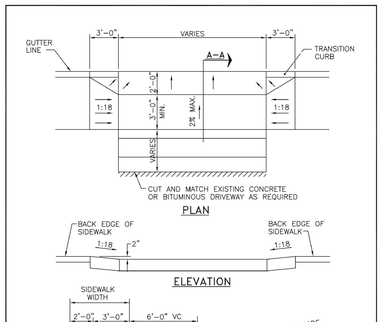

NOTES:
1. SHALL BE IN ACCORDANCE WITH SECTION 905 OF THE R.I. STANDARD SPECIFICATIONS.
2. WHEN DRIVEWAY IS BELOW BACK EDGE OF SIDEWALK PROFILE, STD. 43.4.1 MUST BE USED.

RHODE ISLAND DEPARTMENT OF TRANSPORTATION

REVISIONS: NO. | BY | DATE — 1 | MLP | 3/01/05 — 2 | MLP | 6/27/08 — 3 | MLP | 6/01/10

DRIVEWAY DEVELOPMENT FOR 3'-0" TRANSITION CURB

CHIEF ENGINEER TRANSPORTATION — CHIEF DESIGN ENGINEER TRANSPORTATION — JUNE 15, 1998 ISSUE DATE

R.I. STANDARD 43.4.0

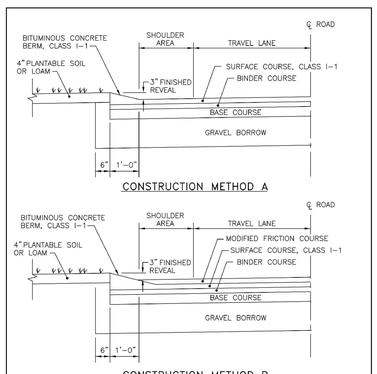

NOTES:
1. SHALL BE IN ACCORDANCE WITH SECTION 906 OF THE R.I. STANDARD SPECIFICATIONS.
2. BITUMINOUS BERM CAN BE PLACED AT THE SAME TIME THAT THE SURFACE COURSE LAYER IS PLACED ON THE PROJECT ROADWAY, OR IT CAN BE INSTALLED IN A SEPARATE OPERATION.

RHODE ISLAND DEPARTMENT OF TRANSPORTATION

REVISIONS: NO. | BY | DATE — 1 | MLP | Mar 05

BITUMINOUS BERM

CHIEF ENGINEER TRANSPORTATION — CHIEF DESIGN ENGINEER TRANSPORTATION — JUNE 15, 1998 ISSUE DATE

R.I. STANDARD 7.5.1

SIGN NUMBER		* R1-1			
LEGEND		STOP			
COLOR	BACKGROUND	RED			
	COPY	WHITE			
SIGN DIMENSION	WIDTH	24"	30"	36"	48"
	HEIGHT	24"	30"	36"	48"

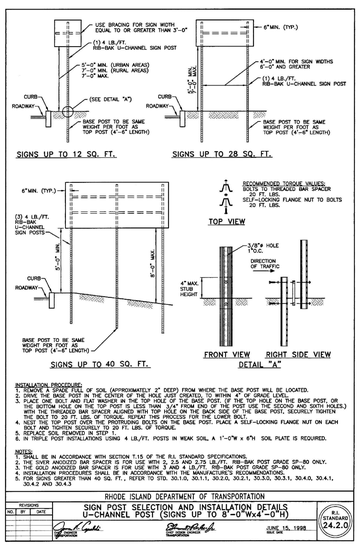

INSTALLATION PROCEDURE:
1. REMOVE A SPADE FULL OF SOIL (APPROXIMATELY 3" DEEP) FROM WHERE THE BASE POST WILL BE LOCATED.
2. PLACE THE BASE POST INTO THE HOLE. THE TOP OF THE BASE POST SHOULD BE 2" ABOVE GRADE.
3. PLACE ONE BOLT AND FLAT WASHER IN THE TOP HOLE OF THE BASE POST, IF THE TOP HOLE ON THE BASE POST, OR THE BOTTOM HOLE ON THE TOP POST IS LESS THAN 1/4" FROM END OF THE POST USE THE SECOND AND SIXTH HOLES.) WITH THE THREADED BAR SPACER ALIGNED WITH TOP HOLE ON THE BACK SIDE OF THE BASE POST, SECURELY TIGHTEN THE BOLT TO 30 FT. LBS. OF TORQUE. REPEAT THIS PROCESS FOR THE LOWER BOLT.
4. ALIGN THE SIGN POST WITH THE THREADED BAR SPACER. PLACE A SELF-LOCKING FLANGE NUT ON EACH BOLT AND TIGHTEN SQUARELY TO 20 FT. LBS. OF TORQUE.
5. REPLACE SOIL REMOVED IN STEP 1.
6. IN TRIPLE POST INSTALLATIONS USING 4 LB./FT. POSTS IN WEAK SOIL, A 1'-0"W x 6"H SOIL PLATE IS REQUIRED.

NOTES:
1. SHALL BE IN ACCORDANCE WITH SECTION 7.15 OF THE R.I. STANDARD SPECIFICATIONS.
2. THE SILVER ANODIZED BAR SPACER IS FOR USE WITH 3 AND 4 LB./FT. RIB-BAR POST GRADE SP-80 ONLY.
3. THE GOLD ANODIZED BAR SPACER IS FOR USE WITH 3 AND 4 LB./FT. RIB-BAR POST GRADE SP-80 ONLY.
4. INSTALLATION PROCEDURES SHALL BE IN ACCORDANCE WITH THE MANUFACTURER'S RECOMMENDATIONS.
5. FOR SIGN POSTS OVER THAN 40 SQ. FT., REFER TO STD. 30.1.0, 30.1.1, 30.2.0, 30.2.1, 30.3.0, 30.3.1, 30.4.0, 30.4.1, 30.4.2 AND 30.4.3.

RHODE ISLAND DEPARTMENT OF TRANSPORTATION

REVISIONS: NO. | BY | DATE

SIGN POST SELECTION AND INSTALLATION DETAILS U-CHANNEL POST (SIGNS UP TO 8'-0"Wx4'-0"H)

CHIEF ENGINEER TRANSPORTATION — CHIEF DESIGN ENGINEER TRANSPORTATION — JUNE 15, 1998 ISSUE DATE

R.I. STANDARD 24.2.0

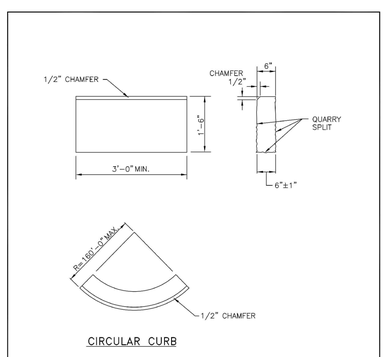

NOTES:
1. SHALL BE IN ACCORDANCE WITH SECTION 906 OF THE R.I. STANDARD SPECIFICATIONS.
2. TOP SURFACE TO BE DRESSED BY SAW. REMAINDER MAY BE QUARRY SPLIT.
3. MINIMUM LENGTH OF STRAIGHT OR CIRCULAR PIECES TO BE 3'-0".
4. CIRCULAR CURB IS REQUIRED ON CURVES WITH RADII OF 160'-0" OR LESS. STRAIGHT CURB TO BE USED ON CURVES OF MORE THAN 160'-0" RADIUS.

RHODE ISLAND DEPARTMENT OF TRANSPORTATION

REVISIONS: NO. | BY | DATE — 1 | MLP | Mar 2005 — 2 | MLP | Sep 2012

GRANITE CURB

CHIEF ENGINEER TRANSPORTATION — CHIEF DESIGN ENGINEER TRANSPORTATION — JUNE 15, 1998 ISSUE DATE

R.I. STANDARD 7.3.0

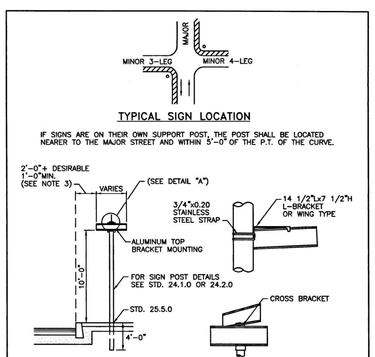

NOTES:
1. SHALL BE IN ACCORDANCE WITH SECTION 7.15 OF THE R.I. STANDARD SPECIFICATIONS.
2. EACH SIGN SHALL HAVE LEGEND ON BOTH SIDES.
3. POSTS SHALL BE INSTALLED AS CLOSE AS POSSIBLE TO THE BACK OF SIDEWALK, UNLESS SPACE DOES NOT PERMIT.

RHODE ISLAND DEPARTMENT OF TRANSPORTATION

REVISIONS: NO. | BY | DATE

STREET SIGN MOUNTING DETAIL

CHIEF ENGINEER TRANSPORTATION — CHIEF DESIGN ENGINEER TRANSPORTATION — JUNE 15, 1998 ISSUE DATE

R.I. STANDARD 24.6.1

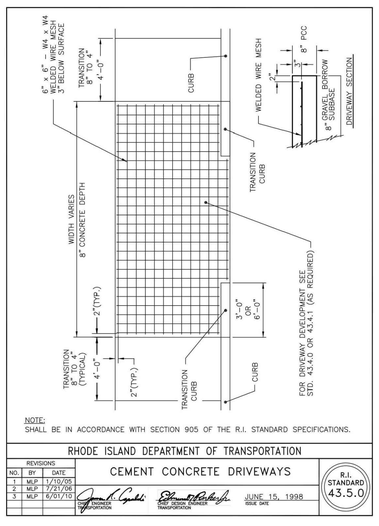

NOTE:
SHALL BE IN ACCORDANCE WITH SECTION 905 OF THE R.I. STANDARD SPECIFICATIONS.

RHODE ISLAND DEPARTMENT OF TRANSPORTATION

REVISIONS: NO. | BY | DATE — 1 | MLP | 7/16/05 — 2 | MLP | 7/21/06 — 3 | MLP | 6/01/10

CEMENT CONCRETE DRIVEWAYS

CHIEF ENGINEER TRANSPORTATION — CHIEF DESIGN ENGINEER TRANSPORTATION — JUNE 15, 1998 ISSUE DATE

R.I. STANDARD 43.5.0

OWNER/APPLICANT:
BOULDER HILL DEVELOPMENT, LLC
PATRICK CZERWIEN, MANAGER
57 PINE RIDGE DRIVE
CRANSTON, RI 02921
PHONE: (401) 413-5648

LEGAL COUNCIL:
MR. THOMAS CRONIN ESQ.
NOLAN, BRUNERO, CRONIN & FERRARA LTD.
1070 MAIN STREET
COVENTRY, RI 02816-5707
PHONE: (401) 828-5800

DRAWING ISSUE:
- ☐ CONCEPT
- ☐ CUSTOMER APPROVAL
- ☒ PERMITTING
- ☐ CONSTRUCTION
- ☐ AS-BUILT
- ☐ OTHER:

ONLY PLANS ISSUED FOR CONSTRUCTION SHALL BE USED FOR CONSTRUCTION

TIMOTHY J. BEHAN — No. 6278 — REGISTERED PROFESSIONAL ENGINEER — 04/21/2026

REVISIONS			
No.	DATE	DRWN	CHKD
1	07-29-25	SMA	TJB
2	07-31-25	SMA	TJB
3	09-02-25	SMA	TJB
4	09-11-25	SMA	TJB
5	11-07-25	SMA	TJB
6	12-04-25	SMA	TJB
7	12-24-25	SMA	TJB
8	01-27-26	SMA	TJB
9	03-31-26	SMA	TJB
10	04-21-26	SMA	TJB

COMMONWEALTH ENGINEERS & CONSULTANTS, INC.
400 SMITH STREET
PROVIDENCE, RHODE ISLAND 02908
(401) 273-6600

PRELIMINARY PLAN APPLICATION
COMPREHENSIVE PERMIT
FOR
SIENA CONDOMINIUMS
A.P. 45 LOTS 10, 11, 12 & 13
MAIN STREET
COVENTRY, RHODE ISLAND

CONSTRUCTION DETAILS-1

SCALE: AS SHOWN	SHEET NO: 13 OF 20	
DRAWN BY: SMA	DESIGN BY: SMA	CHECKED BY: TJB
DATE: MARCH 27, 2025	PROJECT NO.: 25024.00	

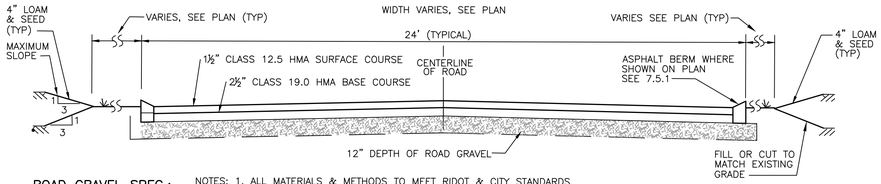

ROAD GRAVEL SPEC.:
GRAVEL SHALL NOT CONTAIN ANY MATERIAL LARGER THAN 4". GRAVEL SHALL MEET THE FOLLOWING:

SIEVE SIZE	% PASSING
1.5"	70–100%
0.75"	50%–85%
#4	30%–55%
#50	8%–25%
#200	2%–10%

NOTES:
1. ALL MATERIALS & METHODS TO MEET RIDOT & CITY STANDARDS.
2. ALL EXISTING LOAM, SUBSOIL, TREE ROOTS, ETC. SHALL BE REMOVED.
3. ALL FILL BENEATH ROAD SHALL BE RIDOT GRAVEL COMPACTED TO 95% MAXIMUM DENSITY.

PRIVATE DRIVEWAY TYPICAL DETAIL
NOT TO SCALE

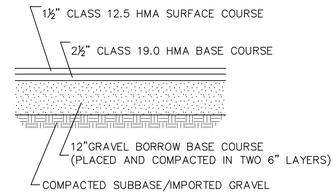

SITE PAVEMENT TYPICAL CROSS SECTION
NOT TO SCALE

R–1 RIP RAP:
100% PASS – 2"
0–50% PASS – 1"
0–15% PASS – NO.4
MIN. DEPTH=6"
BEDDING=FS–1
MIN. DEPTH=3"

R–2 RIP RAP:
100% PASS – 4"
0–50% PASS – 2"
0–15% PASS – 1"
MIN. DEPTH=6"
BEDDING=FS–1
MIN. DEPTH=3"

FILTER FABRIC SPEC.:
SHALL MEET THE FOLLOWING:
THICKNESS=0.08"
OPENING SIZE=#80 SIEVE
FLOW RATE=125 GAL/MIN.
ASTM D751=125 LB.
ASTM D1117=400 PSI.
ASTM D1682=300 LB.

TOPSOIL SPEC.:
TOPSOIL SHALL HAVE A TEXTURE CLASSIFICATION OF SANDY LOAM AND BE FREE OF ROCKS GREATER THAN 3/4", ROOTS, DEBRIS AND ANY UNDESIRABLE MATERIALS AS DETERMINED BY THE TOWN OR ENGINEER. TOPSOIL SHALL ALSO MEET RIDOT SPECIFICATIONS AND HAVE A PERCOLATION RATE OF 10 MINUTES PER INCH OR FASTER.

BANK RUN GRAVEL SPEC.:
GRAVEL SHALL NOT CONTAIN ANY MATERIAL LARGER THAN 3". UP TO 10% MAY BE SIZED BETWEEN 3/4" AND 3". GRAVEL SHALL MEET THE FOLLOWING:

SIEVE SIZE	% PASSING
3/4"	100%
#4	55%–100%
#10	40%–100%
#40	10%–50%
#100	0%–20%
#200	0%–2%

WASHED 2–INCH CRUSHED STONE:
100% PASS – 2"
0–50% PASS – 1"
0–15% PASS – NO.4

ASTM C–33 SAND SPECIFICATION:

SIEVE SIZE	% PASSING	SIEVE SIZE	% PASSING
3/8"	100%	#30	25%–60%
#4	95%–100%	#50	5%–35%
#8	80%–100%	#100	0%–10%
#16	50%–85%	#200	0%–5%

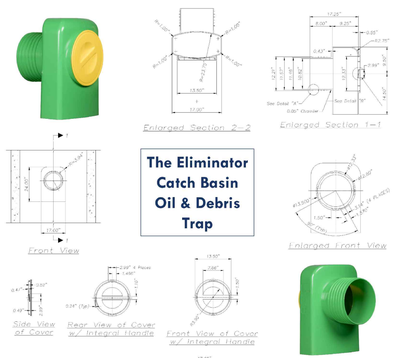

Ground Water Rescue, Inc.
24 Ryden St., Quincy, MA 02169
Tel: 617-773-1128 Fax: 617-773-0510
www.kleanstream.com

MADE IN USA

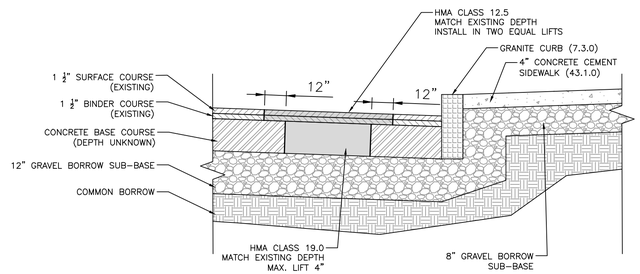

ROADWAY SAWCUT AND MATCH DETAIL
NOT TO SCALE

ROADWAY RESTORATION NOTES:

1. RESTORATION SHALL MATCH EXISTING CONDITIONS ENCOUNTERED IN THE FIELD.
2. CONCRETE CEMENT BASE MAY BE REPLACED WITH HMA CLASS 19 OF EQUAL DEPTH.
3. SURFACE COURSE AND BINDER TO BE CUT BACK A MINIMUM OF 1–FOOT FROM CONCRETE BASE ON EACH SIDE.
4. TACK COAT SHALL BE APPLIED TO ALL EXISTING BITUMINOUS ASPHALT, INCLUDING EDGES, PRIOR TO PLACING PATCH MATERIALS.
5. RESTORATION SHOWN SHALL BE COMPLETED PRIOR TO MICRO MILLING OF WORK AREA.
6. PATCHING SHALL BE IN COMPLIANCE WITH SECTION 900–91 OF THE RIDOT STANDARD SPECIFICATIONS.

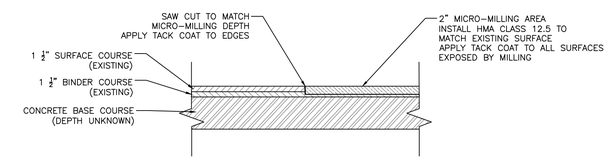

ROADWAY MILLING DETAIL
NOT TO SCALE

MICRO MILLING NOTES:

1. EXISTING DETAIL BASED ON PLANS OF RECORD, NO SOIL BORING AVAILABLE.
2. RESTORATION SHALL MATCH EXISTING CONDITIONS ENCOUNTERED IN THE FIELD.
3. AFTER ALL UTILITY INSTALLATION AND PATCHING IS COMPLETED A MINIMUM OF 2" OF BITUMINOUS ASPHALT SHALL BE REMOVED BY MICRO–MILLING.
4. SURFACE COURSE SHALL BE MODIFIED CLASS 12.5 HMA.
5. TACK COAT SHALL BE APPLIED TO ALL EXISTING BITUMINOUS ASPHALT SURFACES/EDGES PRIOR TO PLACING SURFACE COAT.
6. ASPHALT PAVEMENT INSTALLATION SHALL BE IN COMPLIANCE WITH SECTION 401 OF THE RIDOT STANDARD SPECIFICATIONS.
7. MICRO–MILLING SHALL BE IN COMPLIANCE WITH SECTION 900–91 OF THE RIDOT STANDARD SPECIFICATIONS.

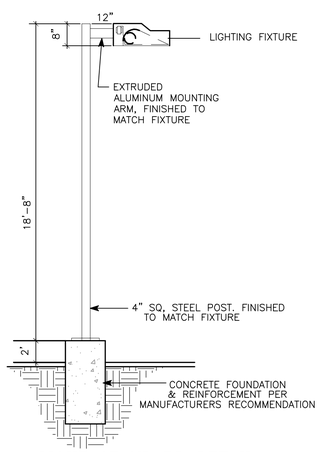

LIGHT STANDARD DETAIL
NOT TO SCALE

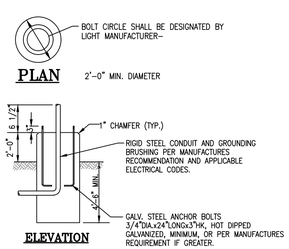

NOTES:
1. CONCRETE FOUNDATION, PRECAST OR CAST–IN–PLACE (SONOTUBE)
2. SHOP DRAWING SUBMITTAL REQUIRED FOR POLE AND FOUNDATION.
3. FOUNDATION TO BE SIZED FOR POLE/LUMINAIRE SPECIFIED AND NORMAL STORM WIND AND ICE LOADS. SEE MANUFACTURER'S REQUIREMENTS FOR TOP OF FOUNDATION ELEVATION RELATIVE TO PROJECT FINISH GRADE AT LIGHT FIXTURE.
4. CONCRETE, 4000 PSI. WITH REINFORCING AS REQUIRED BY DESIGN

LIGHT POLE FOUNDATION
NOT TO SCALE

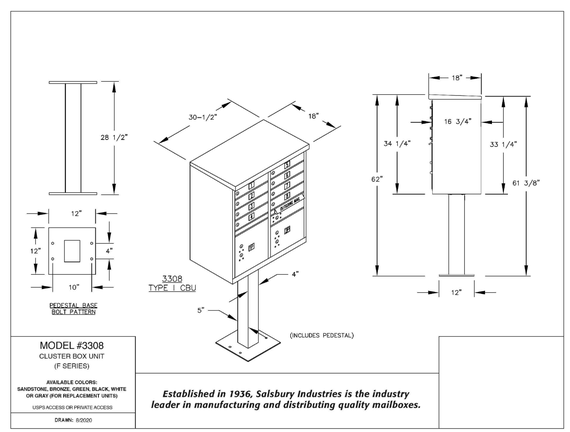

COMMUNITY MAIL BOX DETAIL
(TWO REQUIRED)
NOT TO SCALE

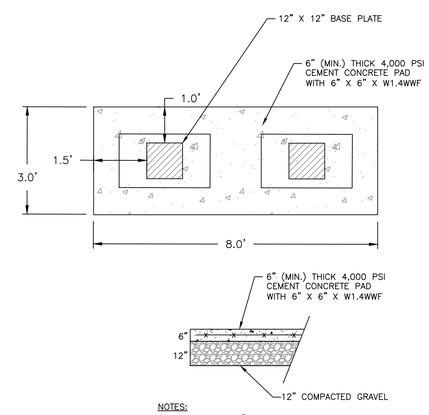

NOTES:
1. REINFORCING 2" CLEAR FROM EDGES.
2. ANCHORS PER MANUFACTURERS RECOMMENDATION.

OWNER/APPLICANT:
BOULDER HILL DEVELOPMENT, LLC
PATRICK CZERWIEN, MANAGER
57 PINE RIDGE DRIVE
CRANSTON, RI 02921
PHONE: (401) 413–5648

LEGAL COUNCIL:
MR. THOMAS CRONIN ESQ.
NOLAN, BRUNERO, CRONIN & FERRARA LTD.
1070 MAIN STREET
COVENTRY, RI 02816–5707
PHONE: (401) 828–5800

DRAWING ISSUE:
- [ ] CONCEPT
- [ ] CUSTOMER APPROVAL
- [x] PERMITTING
- [ ] CONSTRUCTION
- [ ] AS–BUILT
- [ ] OTHER:

ONLY PLANS ISSUED FOR CONSTRUCTION SHALL BE USED FOR CONSTRUCTION

TIMOTHY J. BEHAN
No. 6278
REGISTERED PROFESSIONAL ENGINEER
04/21/2026

COMMONWEALTH ENGINEERS & CONSULTANTS, INC.
400 SMITH STREET
PROVIDENCE, RHODE ISLAND 02908
(401) 273–6600

REVISIONS

No.	DATE	DRWN	CHKD
1	07–29–25	SMA	TJB
2	07–31–25	SMA	TJB
3	09–02–25	SMA	TJB
4	09–11–25	SMA	TJB
5	11–07–25	SMA	TJB
6	12–04–25	SMA	TJB
7	12–24–25	SMA	TJB
8	01–27–26	SMA	TJB
9	03–31–26	SMA	TJB
10	04–21–26	SMA	TJB

PRELIMINARY PLAN APPLICATION
COMPREHENSIVE PERMIT
FOR
SIENA CONDOMINIUMS
A.P. 45 LOTS 10, 11, 12 & 13
MAIN STREET
COVENTRY, RHODE ISLAND

CONSTRUCTION DETAILS–2

SCALE: AS SHOWN		SHEET NO: 14 OF 20
DRAWN BY: SMA	DESIGN BY: SMA	CHECKED BY: TJB
DATE: MARCH 27, 2025		PROJECT NO.: 25024.00

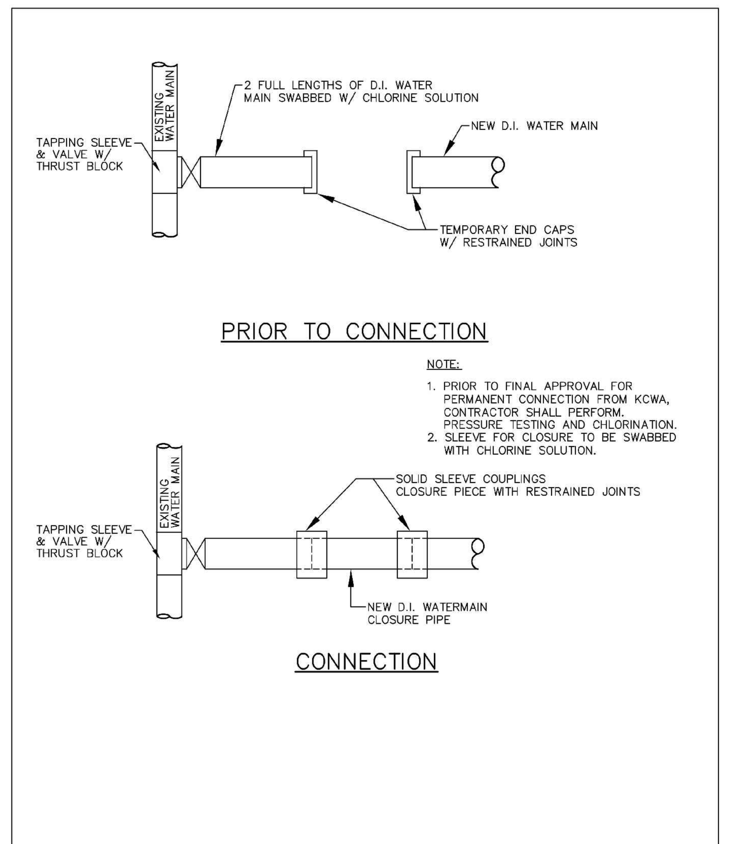

KENT COUNTY WATER AUTHORITY
KCWA "proudly serving"
CONNECTION OF NEW WATER MAIN TO EXISTING WATER MAIN
NOT TO SCALE DATE: 09/2006
CONWM.DWG

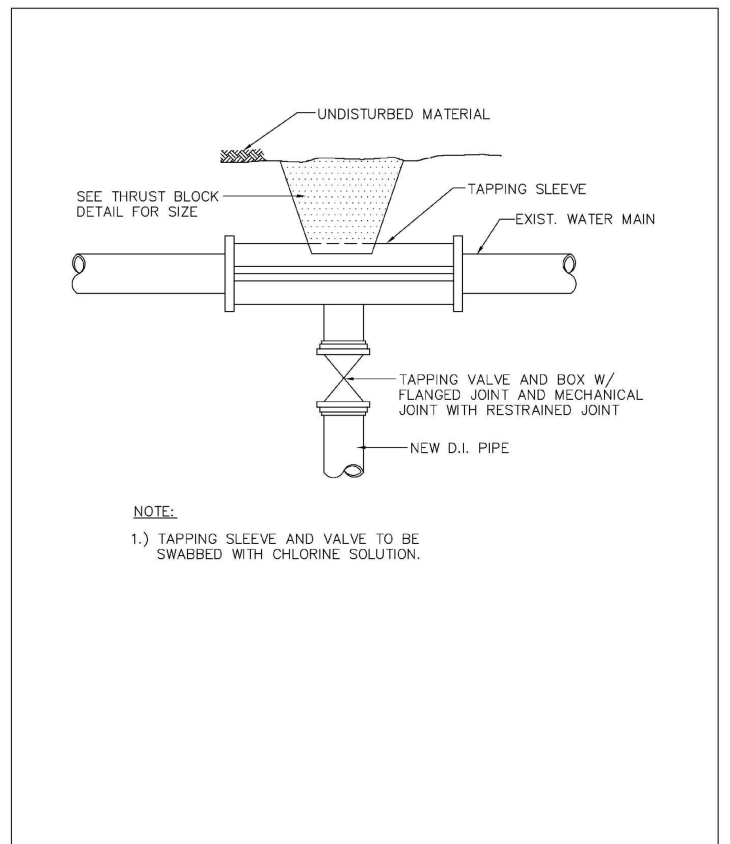

KENT COUNTY WATER AUTHORITY
KCWA "proudly serving"
TAPPING SLEEVE AND VALVE
NOT TO SCALE DATE: 09/2006

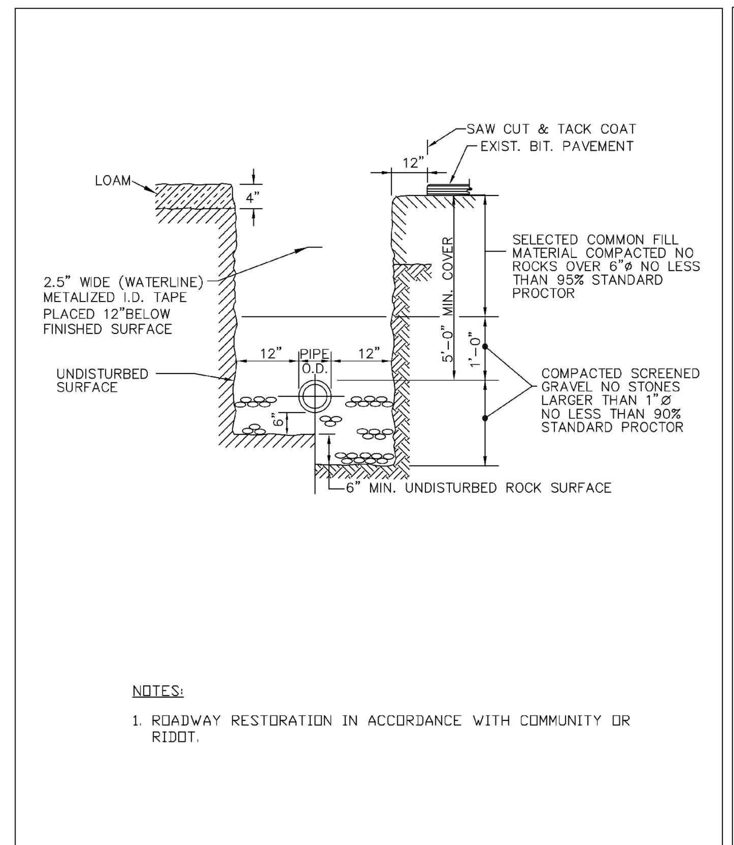

KENT COUNTY WATER AUTHORITY
KCWA "proudly serving"
TRENCH INSTALLATION IN ROCK AND SOIL
NOT TO SCALE DATE: 09/2006

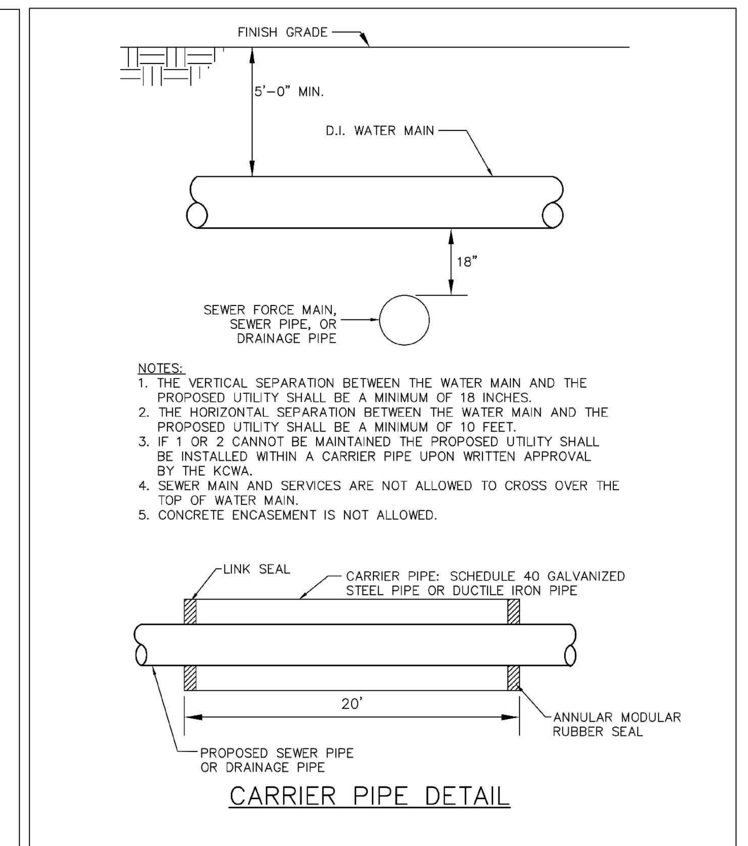

KENT COUNTY WATER AUTHORITY
KCWA "proudly serving"
UTILITY SEPERATION
NOT TO SCALE DATE: 09/2006

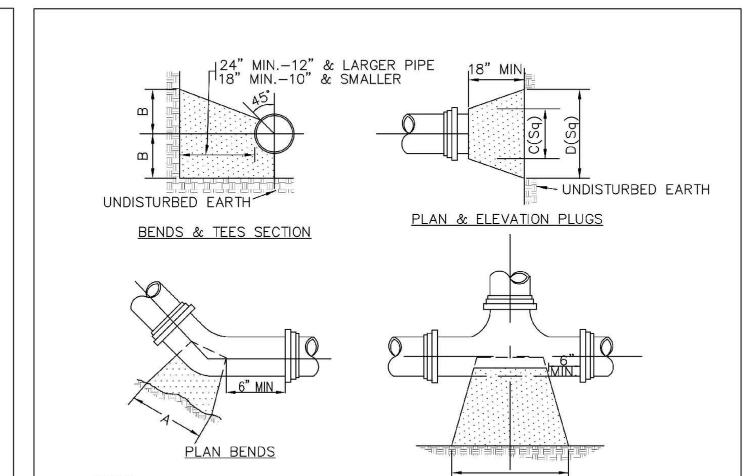

NOTES:
1.) ALL CONCRETE SHALL BE 4000 P.S.I @ 28 DAYS.
2.) CONCRETE THRUST BLOCKS SHALL BEAR AGAINST UNDISTURBED EARTH.
3.) FORMS TO BE USED AS NECESSARY.
4.) ALL BOLTS AND NUTS TO BE PROTECTED FROM CONCRETE AND EASILY ACCESSIBLE WHEN THRUST BLOCK INSTALLED.
5.) REGISTERED PROFESSIONAL ENGINEER IN THE STATE OF R.I. SHALL VERIFY ALL CALCULATIONS DURING DESIGN TO MEET CONDITIONS OF PROJECT AND KCWA REQUIREMENTS.

SIZE	TEES		PLUGS		90° BEND		45° BEND		22½° BEND		11¼°BEND	
	A	B	C	D	A	B	A	B	A	B	A	B
6"	20"	10"	10"	21"	24"	12"	18"	9"	13"	7"	9"	5"
8"	26"	13"	12"	26"	32"	16"	24"	12"	17"	9"	12"	6"
10"	34"	17"	14"	34"	40"	20"	30"	15"	22"	11"	15"	8"
12"	41"	20"	16"	41"	48"	24"	35"	18"	25"	13"	18"	9"
16"	54"	27"	20"	54"	64"	32"	47"	23"	34"	17"	24"	12"

KENT COUNTY WATER AUTHORITY
KCWA "proudly serving"
THRUST BLOCK
NOT TO SCALE DATE: 09/2006
TBLKDET.DWG

RESTRAINED PIPE LENGTHS FOR RESTRAINED FITTINGS

FITTING	RESTRAINED LENGTH
12" PLUG	94'
12" TEE	44'
12" 90°	58'
12" 45°	44'
12" 22 1/2°	22'
12" 11 1/4°	22'
8" PLUG	58'
8" TEE	44'
8" 90°	44'
8" 45°	22'
8" 22 1/2°	22'
8" 11 1/4°	22'
8" X 6"	44'
6" PLUG	44'
6" TEE	22'
6" 90°	22'
6" 45°	22'
6" 22 1/2°	22'
6" 11 1/4°	22'

NOTE:
1. ALL JOINTS, INCLUDING PIPE JOINTS, VALVE JOINTS, AND FITTING JOINTS, SHALL BE RESTRAINED WITHIN THE LIMITS OF RESTRAINED LENGTHS LISTED ON THIS TABLE. MECHANICAL JOINT PIPE AND MECHANICAL RESTRAINTS WILL BE IN ACCORDANCE WITH THE ABOVE TABLE.
2. THE TABLE SHOWS LENGTHS OF PIPES WHICH MUST BE RESTRAINED ON BOTH SIDES OF THE FITTING.
3. ALL DEAD END PIPE SHALL BE PROPERLY RESTRAINED PRIOR TO PRESSURE TESTING.
4. REGISTERED PROFESSIONAL ENGINEER IN THE STATE OF R.I. SHALL VERIFY ALL RESTRAINING CALCULATIONS & LENGTHS DURING DESIGN, MEETING ALL REQUIREMENTS OF THE KCWA.

KENT COUNTY WATER AUTHORITY
KCWA "proudly serving"
RESTRAINED PIPE LENGTHS
NOT TO SCALE DATE: 09/2006
ASBTDET.DWG

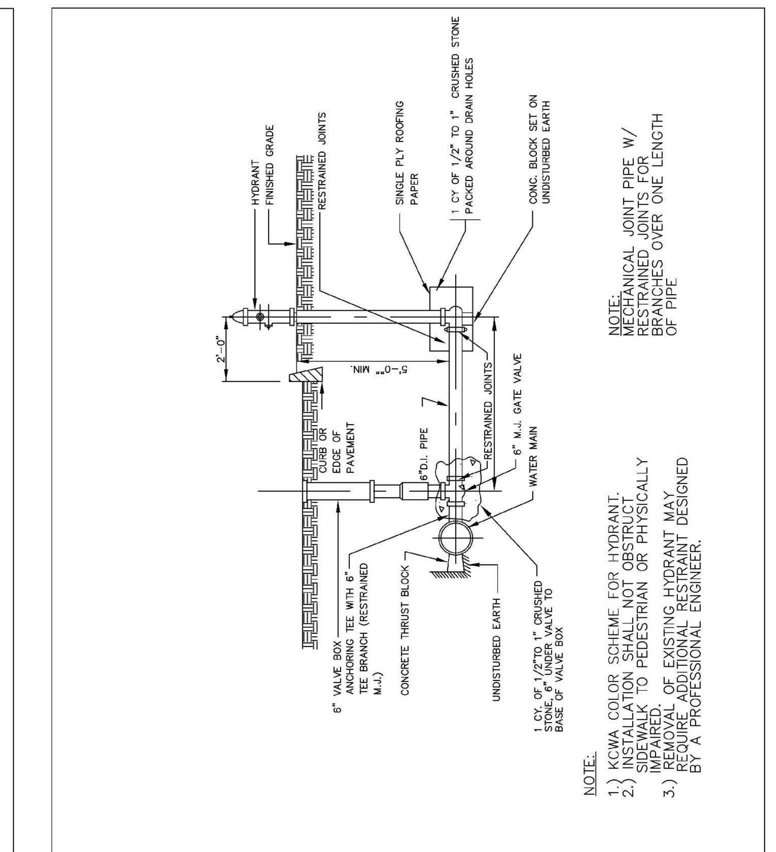
KENT COUNTY WATER AUTHORITY
KCWA "proudly serving"
HYDRANT
NOT TO SCALE DATE: 09/2006
HYDRANT.DWG

WATER SYSTEM NOTES:

1. CONTRACTOR SHALL REVIEW AND COMPLY WITH ALL KENT COUNTY WATER AUTHORITY (KCWA) RULES, REGULATIONS, AND INSTALLATION REQUIREMENTS.
2. CONTRACTOR TO COORDINATE ANY NECESSARY SHUTDOWN OF EXISTING WATER MAIN WITH KCWA PRIOR TO ANY WORK.
3. CONSTRUCTION MATERIALS AND METHODS FOR WATER MAINS AND SERVICE CONNECTIONS HAVE BEEN STANDARDIZED BY KCWA. THE CONTRACTOR SHALL ONLY USE KCWA APPROVED MATERIALS AND METHODS. THE CONTRACTOR SHALL USE KCWA MATERIALS AND METHODS WHEN IN CONFLICT WITH DRAWINGS.
4. WATER MAIN PIPE: ALL DUCTILE-IRON PIPE AND APPURTENANCES SHALL BE FROM A SINGLE MANUFACTURER SOURCE. FOREIGN PIPE FITTINGS AND GASKETS ARE STRICTLY FORBIDDEN. DUCTILE IRON PIPE SHALL CONFORM TO ANSI/AWWA C151/A21.51, ANSI/AWWA C150/A21.50 CLASS 52 DOUBLE CEMENT MORTAR LINED. GASKETS SHALL CONFORM TO ANSI/AWWA C111/A21.1. ALL PIPES SHALL HAVE A BITUMINOUS OUTSIDE COATING IN ACCORDANCE WITH ANSI/AWWA C151/A21.51 AND ANSI/AWWA C153/A21.53 RESPECTIVELY. ALL PIPES SHALL BE CEMENT-MORTAR LINED AND SEAL COATED IN ACCORDANCE WITH ANSI/AWWA C104/A21.14 EXCEPT THE LINING THICKNESS SHALL BE TWICE THAT SPECIFIED. JOINTS FOR PIPE SHALL BE PUSH-ON (TYTON STYLE ONLY) OR MECHANICAL JOINT CONFORMING TO ANSI/AWWA C111. ALL MECHANICAL JOINT PIPES SHALL BE SUPPLIED WITH ACCESSORIES. RESTRAINED JOINTS SHALL BE SUITABLE FOR 150 PSI WORKING PRESSURE AND FABRICATED OF HEAVY SECTION DUCTILE IRON CASTING. GASKETS SHALL MEET THE MATERIAL REQUIREMENTS OF ANSI/AWWA AND MADE IN THE USA.

   TYPE: DUCTILE IRON MEETING ANSI/AWWA C151/A21.51 ANSI/AWWA C150/A21.50.
   CLASS: SPECIAL THICKNESS CLASS 52.
   LINING: DOUBLE CEMENT MORTAR MEETING ANSI/AWWA C151/A21.5.
   END JOINTS: PUSH ON (TYTON STYLE ONLY) – MEETING ANSI/AWWA C111/A21.51.
   MECHANICAL JOINT – MEETING ANSI/AWWA C111/A21.11.
   COATING: EXTERIOR: ANSI/AWWA C104/A21.4.
   INTERIOR: ALL REQUIREMENTS OF EPA FOR POTABLE WATER.
   GASKET: RUBBER MEETING ANSI/AWWA C111/A21.11.
   NITRILE (IN CONTAMINATED SOIL).

5. FITTINGS: DUCTILE IRON FITTINGS SHALL CONFORM TO ANSI/AWWA C153/A21.53. FOREIGN FITTINGS, GASKET GLANDS AND ACCESSORIES ARE STRICTLY FORBIDDEN. ALL FITTINGS SHALL HAVE A BITUMINOUS OUTSIDE COATING IN ACCORDANCE WITH ANSI/AWWA C151/A21.51 AND ANSI/AWWA C153/A21.53 RESPECTIVELY. ALL FITTINGS SHALL BE CEMENT-MORTAR LINED AND SEAL COATED IN ACCORDANCE WITH ANSI/AWWA C104/A21.14 EXCEPT THE LINING THICKNESS SHALL BE TWICE THAT SPECIFIED. JOINTS FOR FITTINGS SHALL BE MECHANICAL JOINT CONFORMING TO ANSI/AWWA C111. ALL MECHANICAL JOINT FITTINGS SHALL BE SUPPLIED WITH GLANDS AND ACCESSORIES.

   TYPE: 4 INCH TO 12 INCH DUCTILE IRON COMPACT MEETING ANSI/AWWA C153/A21.53. 16 INCH AND LARGER DUCTILE IRON MEETING ANSI/AWWA C153/A21.53 OR ANSI/AWWA C110/A21.10.

   PRESSURE CLASS: PIPE FITTINGS SHALL HAVE A PRESSURE RATING OF 350 FOR 24-INCH AND SMALLER AND 250 PSI FOR 30-INCH AND LARGER. FITTINGS SHALL AT A MINIMUM HAVE THE SAME PRESSURE RATING AS THE CONNECTING PIPE.

   GASKETS: RUBBER MEETING ANSI/AWWA C111/A21.11. NITRILE (IN CONTAMINATED SOIL).

5. VALVES: VALVES SHALL BE CAST IRON OR DUCTILE IRON 250-PSI WORKING PRESSURE. OPERATING STEM SHALL BE PROVIDED WITH A MINIMUM OF TWO (2) O-RING STEM SEALS. BONNET AND GLAND BOLTS/WASHERS SHALL BE STAINLESS STEEL. WEDGES SHALL BE FULLY ENCAPSULATED. THE INTERIOR AND EXTERIOR SURFACES OF ALL CAST IRON OR DUCTILE IRON COMPONENTS SHALL BE FUSION BOND EPOXY COATED, 8 MILS MINIMUM THICKNESS. EPOXY COATING MUST BE UNDAMAGED WITH NO CHIPS OR ABRASIONS. FIELD TOUCH-UP OF INTERIOR COATING IS NOT ALLOWED. FIELD TOUCH-UP OF EXTERIOR SURFACES SHALL BE IN ACCORDANCE WITH MANUFACTURES RECOATING SPECIFICATIONS ONLY. CONTRACTORS SHALL USE SPECIAL HANDLING AND INSTALLATION PRECAUTIONS WITH THE USE OF EPOXY COATED VALVES AS NECESSARY TO ENSURE THAT NO COATING SYSTEM DAMAGE OCCURS. AT A MINIMUM FIBER SLINGS OR BELTS SHALL BE USED FOR ALL HANDLING. ALL EPOXY-COATED VALVES SHALL BE PALLETIZED AND PROPERLY SHRINK-WRAPPED UPON DELIVERY TO ASSURE COATING SYSTEM INTEGRITY IS NOT COMPROMISED. ALL EPOXY VALVES FOUND MISHANDLED AT DELIVERY OR DURING INSTALLATION SHALL BE REJECTED AND REMOVED FROM THE JOB SITE. ALL VALVES SHALL BE MANUFACTURED TO MEET OR EXCEED AWWA C509 AND ISO 9000 ALONG WITH THE DESIGN AND OPERATING CHARACTERISTICS OF THE FOLLOWING DEVICES:

   RESILIENT SEAT GATE 4 INCH TO 12 INCH:

   TYPE: BURIED SERVICE NON-RISING STEM.

   ABOVE GRADE SERVICE OR PITS OS & Y WITH HAND WHEEL OR NON-RISING STEM WITH HAND WHEEL.

   WORKING PRESSURE: 250 PSI
   OPENING: LEFT OR RIGHT, DEPENDING ON SYSTEM LOCATION
   STEM: 420 STAINLESS STEEL OR EQUAL WITH MINIMUM 60,000 PSI YIELD STRENGTH
   FASTENERS: STAINLESS STEEL, TYPE 304 FOR ALL OF THE VALVE
   COATINGS: INTERNAL & EXTERIOR TO BE COATED WITH FUSE BONDED HOLIDAY FREE EPOXY COATING MINIMUM 8 MILS NOMINAL THICKNESS MEETING OR EXCEEDING AWWA C550
   WEDGES: FULLY RUBBER ENCAPSULATED CAST IRON, DUCTILE IRON OR BRONZE GATE MEETING AWWA C509
   OPERATING NUT: 2 INCH SQUARE OPERATING NUT WITH HEXAGON STAINLESS STEEL BOLT FASTENER
   STEM SEAL: MINIMUM TWO O-RING SEALS
   CONNECTION: MECHANICAL JOINT

   TAPPING SLEEVE & VALVE: VALVES SHALL BE FULL BODY AND FULL PORT TAPPING TYPE MEETING THE REQUIREMENTS PARAGRAPH 4.9.1.1 ABOVE. SLEEVES SHALL BE FULL PORT DUCTILE IRON OR GRADE 18-8 TYPE 304 STAINLESS STEEL. DUCTILE IRON SLEEVES SHALL BE OF THE SAME MANUFACTURER AS OF THE VALVE AND BITUMINOUS COATED. ALL SLEEVES SHALL BE MANUFACTURED TO MEET OR EXCEED THE DESIGN AND OPERATING CHARACTERISTICS OF ONE OF THE FOLLOWING DEVICES:

   TYPE: RESILIENT SEAT GATE VALVES DESIGNED SPECIFICALLY FOR TAPPING.

   SEAL: STAINLESS STEEL SLEEVES SHALL USE GRID PATTERN VIRGIN RUBBER ASTM 2000, FULL 360-DEGREE PIPE COVERAGE. DUCTILE IRON SLEEVES SHALL USE MECHANICAL JOINT WITH RUBBER SEALS.

   MAXIMUM WORKING PRESSURE: 4-12 INCH: 250 PSI 16-24 INCH: 200 PSI

   FASTENER: GRADE 18-8 TYPE 304 STAINLESS STEEL.

6. SERVICE PIPE SERVICE PIPE SIZES ¾ TO 2 INCH SHALL BE COPPER PIPE.
   COPPER TUBING JOINTS SHALL COMPLY WITH NSF 61 AND CONFORM TO ONE OF THE FOLLOWING TYPES:

   A. BRAZED JOINTS – ALL JOINT SURFACES SHALL BE CLEANED AND APPROVED FLUX SHALL BE APPLIED WHERE REQUIRED. THE JOINT SHALL BE BRAZED WITH A FILLER METAL CONFORMING TO AWS A5.8.
   B. FLARED JOINTS – FLARED JOINTS FOR WATER PIPE SHALL BE MADE BY A TOOL DESIGNED FOR THAT OPERATION.
   C. MECHANICAL JOINTS – MECHANICAL JOINTS SHALL BE INSTALLED IN ACCORDANCE WITH THE MANUFACTURERS INSTRUCTIONS AND BE RATED FOR 200 PSI MINIMUM.
   D. SOLDERED JOINTS – SOLDER JOINTS SHALL BE MADE IN ACCORDANCE WITH THE METHODS OF ASTM B828. ALL CUT TUBE ENDS SHALL BE REAMED TO THE FULL INSIDE DIAMETER OF THE TUBE END. ALL JOINT SURFACES SHALL BE CLEANED. A FLUX CONFORMING TO ASTM B813 SHALL BE APPLIED. THE JOINT SHALL BE SOLDERED WITH A SOLDER CONFORMING TO ASTM B 32. THE JOINING OF WATER SUPPLY PIPING SHALL BE MADE WITH LEAD-FREE SOLDERS AND FLUXES. "LEAD FREE" SHALL MEAN A CHEMICAL COMPOSITION EQUAL TO OR LESS THAN 0.2-PERCENT LEAD.

   PE PIPE AND TUBING JOINTS SHALL COMPLY WITH NSF 61, BE RATED FOR A WORKING PRESSURE OF 200 PSI AND CONFORM TO ONE OF THE FOLLOWING TYPES:

   A. HEAT FUSION JOINTS – JOINT SURFACES SHALL BE CLEAN AND FREE FROM MOISTURE. ALL JOINT SURFACES SHALL BE HEATED TO MELT TEMPERATURE AND JOINED. THE JOINT SHALL BE UNDISTURBED UNTIL COOL. JOINTS SHALL BE MADE IN ACCORDANCE WITH ASTM D2657.
   B. MECHANICAL JOINTS – MECHANICAL JOINTS SHALL BE INSTALLED IN ACCORDANCE WITH THE MANUFACTURER'S INSTRUCTIONS.
   C. GENERAL – PE PIPE SHALL BE CUT SQUARE, WITH A CUTTER DESIGNED FOR PLASTIC PIPE. EXCEPT WHERE JOINED BY HEAT FUSION, PIPE ENDS SHALL BE CHAMFERED TO REMOVE SHARP EDGES. KINKED PIPE SHALL NOT BE INSTALLED. THE MINIMUM PIPE BENDING RADIUS SHALL NOT BE LESS THAN 30 PIPE DIAMETERS, OR THE MINIMUM COIL RADIUS, WHICHEVER IS GREATER. PIPING SHALL NOT BE BENT BEYOND STRAIGHTENING OF THE CURVATURE OF THE COIL. BENDS SHALL NOT BE PERMITTED WITHIN 10 PIPE DIAMETERS OF ANY FITTING OR VALVE. STIFFENER INSERTS INSTALLED WITH COMPRESSION-TYPE COUPLINGS AND FITTINGS SHALL NOT EXTEND BEYOND THE CLAMP OR NUT OF THE COUPLING OR FITTING.

7. CORPORATION STOPS SHALL BE BALL TYPE WITH EITHER STAINLESS STEEL, SYNTHETIC COATED BRASS BALL OR NICKEL COATED BRASS BALL DESIGNED FOR POTABLE WATER SERVICE UP TO 300 PSI. BODY SHALL BE HEAVY CAST LEAD FREE 'ENVIROBRASSII' UNS ALLOY NUMBER C89520 ASTM B584-98a AND/OR AWWA C800/ASTM B-62 MEETING OR EXCEEDING THE LEAD LEACHING PERFORMANCE SPECIFICATIONS OF ANSI/NSF 61 STANDARD. ALL CORPORATION STOPS SHALL MEET OR EXCEED DESIGN STANDARDS OF AWWA C800 ALONG WITH THE FOLLOWING:
   A. TYPE = FORD OR EQUAL
   B. OPEN = OPENS LEFT
   C. END CONNECTIONS = COMPRESSION WITH NON-CORROSIVE GRIP RING MEETING ASTM B-159-BUNA N RUBBER AND CONDUCTIVITY RING. THREADED END SHALL BE AWWA CC TAPER THREAD FOR DIRECT TAP.
8. CURB STOPS SHALL BE BALL TYPE WITH EITHER STAINLESS STEEL, SYNTHETIC COATED BRASS BALL OR NICKEL COATED BRASS BALL DESIGNED FOR POTABLE WATER SERVICE UP TO 300 PSI. BODY SHALL BE HEAVY CAST LEAD FREE 'ENVIROBRASSII' UNS ALLOY NUMBER C89520 ASTM B584-98a AND/OR AWWA C800/ASTM B-62 MEETING OR EXCEEDING THE LEAD LEACHING PERFORMANCE SPECIFICATIONS OF ANSI/NSF 61 STANDARD. ALL CURB STOPS SHALL MEET OR EXCEED DESIGN STANDARDS OF AWWA C800 ALONG WITH THE FOLLOWING:
   A. TYPE = FORD OR EQUAL
   B. OPEN = OPENS LEFT
   C. END CONNECTIONS = COMPRESSION WITH NON-CORROSIVE GRIP RING MEETING ASTM B-159-BUNA N RUBBER AND CONDUCTIVITY RING.
   D. DRAIN = NONE
9. SADDLE FOR SERVICE CONNECTION TO DUCTILE IRON MAIN, IF USED, SHALL BE DUCTILE IRON OR TYPE 304 STAINLESS STEEL WITH STAINLESS STEEL BOLTS, WASHERS, NUTS AND BANDS. DUCTILE IRON COMPONENTS SHALL BE COATED WITH FUSION BONDED EPOXY MINIMUM 8 MILS THICKNESS MEETING OR EXCEEDING AWWA C550 OR NYLON COATED.

   A. TYPE = FORD OR EQUAL (SADDLE ON 8" DUCTILE IRON MAIN)
   B. BODY = DUCTILE IRON OR GRADE 18-8 TYPE 304 STAINLESS STEEL
   C. BAND = GRADE 18-8 TYPE 304 STAINLESS STEEL DOUBLE BAND.
   D. FASTENERS = 304 STAINLESS STEEL STUD, NUT & WASHERS.
   E. GASKET = VIRGIN RUBBER ASTM 2000.
   F. OUTLET = THREADED OUTLET TAPPED TO AWWA C800 FOR THE APPROPRIATE SERVICE SIZE.
10. DUCTILE IRON COUPLINGS: STRAIGHT AND TRANSITION COUPLINGS SHALL BE DUCTILE IRON MANUFACTURED TO MEET AWWA C 219 AND FITTED WITH STAINLESS STEEL BOLTS WASHERS AND NUTS. DUCTILE IRON COMPONENTS SHALL BE COATED WITH FUSION BONDED EPOXY MINIMUM 8 MILS THICKNESS MEETING OR EXCEEDING AWWA C550. COUPLINGS SHALL BE MANUFACTURED TO MEET OR EXCEED THE DESIGN AND OPERATING CHARACTERISTICS OF THE FOLLOWING:

TYPE: FORD OR EQUAL.
BODY: DUCTILE IRON.
COATING: DUCTILE IRON COMPONENTS SHALL BE EPOXY COATED AWWA C 500.
FASTENERS: 304 STAINLESS STEEL STUD, NUT & WASHERS.
gasket: RUBBER ASTM 2000.

11. ALL METERS SHALL BE COMPATIBLE WITH THE SYSTEM UTILIZED BY THE KENT COUNTY WATER AUTHORITY, THE NEPTUNE E-CODER R-900. ALL METERS SHALL READ IN CUBIC FEET AND BE CAPABLE OF BEING READ BY THE RADIO FREQUENCY SYSTEM USED BY KCWA. REGISTER SHALL CONTAIN A 9-DIGIT LOCAL REGISTRATION AND 4-8 DIGITS CAN BE COMMUNICATED FOR BILLING PURPOSES.
12. SERVICE BOXES (LOCATED OFF ROADWAYS) SHALL BE MANUFACTURED IN NORTH AMERICA. THEY SHALL BE HEAVY PATTERN CAST IRON, BUFFALO STYLE, SLIP ADJUSTABLE TYPE WITH HEAVY CAST IRON COVER AND BRASS BOLT FASTENER TYPE LOCK. THE WORD 'WATER' SHALL BE CAST UPON THE COVER IN HEAVY PATTERN RAISED LETTERS. COVERS SHALL BE DROP IN TYPE WITHOUT FINS SOLID RING. BOXES SHALL HAVE A BITUMINOUS INTERNAL AND EXTERNAL COATING IN ACCORDANCE WITH ANSI/AWWA C151/A21.51 AND ANSI/AWWA C153/A21.53 RESPECTIVELY. BOXES SHALL HAVE BARRELS OF NOT LESS THAN 2-1/2" IN DIAMETER. THE UPPER SECTION OF EACH BOX SHALL HAVE A BOTTOM FLANGE OF SUFFICIENT BEARING AREA TO PREVENT SETTLING. THE BASE OF THE LOWER SECTION SHALL BE A REINFORCED ARCH CONFIGURATION AND SIZED TO ENCLOSE THE CURB STOP. BOX SECTIONS SHALL BE OF SUFFICIENT LENGTH TO PROVIDE COMPLETE COVERAGE FOR THE DEPTH OF BURY.
13. VALVE ROAD BOXES ALL VALVES LOCATED IN ROADWAYS (EXCEPT SWING-CHECK) SHALL BE EQUIPPED WITH A CAST IRON "BUFFALO" TYPE, ADJUSTABLE (SLIDING) VALVE ROAD BOX. THE UPPER PORTION SHALL BE 26 INCH LONG AND THE BOTTOM SECTION 48 INCH (MIN). COVERS SHALL BE 5-1/4" IN DIAMETER SOLID RING SEAT WITH THE WORD "WATER" (IN CAPS) CAST UPON IT. THE UPPER PORTION OF THE BOX SHALL BE MANUFACTURED WITH A HEAVY FLANGE HAVING SUFFICIENT BEARING AREA TO PREVENT SETTLEMENT. THE LOWER SECTION SHALL BE CONFIGURED TO ENCLOSE THE VALVE STUFFING BOX WITH AN INSIDE DIAMETER OF AT LEAST 4-1/4 INCH. THE INSTALLED BOX SHALL BE CAPABLE OF VERTICAL ADJUSTMENT OF A MINIMUM OF 6 INCH WHILE MAINTAINING AN OVERLAP OF A LEAST 4 INCH BETWEEN SECTIONS.
14. ALL HOSE BIBS PROVIDED FOR THE HOUSES SHALL BE OF THE DESIGN, WHICH INCORPORATES A BUILT-IN TAMPER PROOF VACUUM BREAKER FEATURE AS MANUFACTURED BY THE BOSE BIB MAKER. ALL HOSE BIB FIXTURES SHALL BE AMERICAN MADE. THIS REQUIREMENT IS APPLICABLE TO ALL INTERIOR AND EXTERIOR HOSE BIB APPLICATIONS. EXISTING PROPERTIES SHALL BE RETROFITTED WITH NON-REMOVABLE HOSE BIB VACUUM BREAKER ASSEMBLIES SPECIFICALLY DESIGNED TO ADAPT TO THE EXISTING HOSE BIB CONFIGURATION.
15. THE PROPERTY OWNER SHALL BE RESPONSIBLE TO INSTALL AN APPROPRIATE THERMAL EXPANSION DEVICE IN THE FACILITY TO COMPLY WITH CROSS CONNECTION REQUIREMENTS OF THE RHODE ISLAND PLUMBING CODE.
16. MINIMUM COVER OVER WATER PIPE IS 5 FEET.
17. PROVIDE WARNING TAPE OVER SERVICE AS SHOWN IN TRENCH DETAIL.
18. THE WATER MAIN AND SERVICES SHALL BE FILLED, FLUSHED, HYDROSTATICALLY PRESSURE TESTED TO 180 PSI AND CHLORINATED/DISINFECTED IN ACCORDANCE WITH KCWA RULES & REGULATIONS, AWWA C651, RHODE ISLAND DEPARTMENT OF HEALTH, AND "AWWA MANUAL OF WATER SUPPLY PRACTICE M55 – PE PIPE DESIGN AND INSTALLATION". REFER TO SECTION 3.23 'DISINFECTION/CHLORINATION' OF THE KCWA RULES AND REGULATIONS AND KCWA'S 'CUSTOMER WATER SERVICE DISINFECTION POLICY'. NOTE: MAXIMUM VELOCITY WHEN FILLING THE PE PIPE WITH WATER SHALL BE 1 FT/SEC (1 GAL/MIN FOR 1" CTS PIPE).
19. A MINIMUM OF TEN-FOOT HORIZONTAL SEPARATION SHALL BE MAINTAINED IN THE PLACEMENT OF WATER MAINS, SERVICES OR APPURTENANCES WITHIN THE VICINITY OF SEWER FACILITIES OR VICE VERSA. WHERE WATER MAINS CROSS SEWER MAINS, THE CROWN OF THE SEWER MAIN SHALL BE AT LEAST 18-INCHES BELOW THE BOTTOM OF THE WATER MAIN. IN CASES WHERE IT IS NOT POSSIBLE TO MAINTAIN A 10-FOOT, HORIZONTAL SEPARATION OR IN THE CASE OF CROSSING THE EIGHTEEN-INCH, VERTICAL SEPARATION, A DEVIATION FROM THIS RESTRICTION MAY BE ALLOWED ON A CASE BY CASE BASIS WITH PRIOR APPROVAL FROM THE GENERAL MANAGER/CHIEF ENGINEER AS TO THE PROPOSED MATERIALS AND INTERVENTIONS TO BE TAKEN TO PROTECT THE WATER SYSTEM FROM THE POSSIBILITY OF CONTAMINATION. IN ALL CASES, FORCE MAIN SEWER INFRASTRUCTURE MUST BE LOCATED BELOW WATER MAINS.
20. METALIZED DETECTABLE IDENTIFICATION TAPE 2" IN WIDTH OR GREATER, BLUE IN COLOR AND PRINTED WITH "CAUTION WATER LINE BURIED BELOW" SHALL BE UTILIZED OVER ALL WATER LINES AND SERVICES. SET TO A DEPTH FROM FINISHED GRADE OF NO MORE THAN 1'-0".
21. A TEMPORARY PATCH SHALL BE INSTALLED OVER THE FRESHLY BACKFILLED TRENCH IN AN EXISTING STREET OR SIDEWALK USING HOT BITUMINOUS CONCRETE. IT SHALL BE AT LEAST 3" THICK CONSISTING OF EQUAL THICKNESS LAYERS OF MODIFIED BINDER AND TYPE I-1 WEARING COURSE. AFTER 60 DAYS, THE TEMPORARY PATCH SHALL BE REMOVED AND REPLACED WITH A PERMANENT PATCH. ALL PAVEMENT EDGES SHALL BE SAW CUT.
22. AN AS-BUILT PLAN IS REQUIRED. CONTRACTOR SHALL RETAIN THE SERVICES OF A RHODE ISLAND PROFESSIONAL LAND SURVEYOR TO INSPECT THE SERVICE AND PREPARE THE AS-BUILT PLAN IN ACCORDANCE WITH THE KCWA RULES AND REGULATIONS.

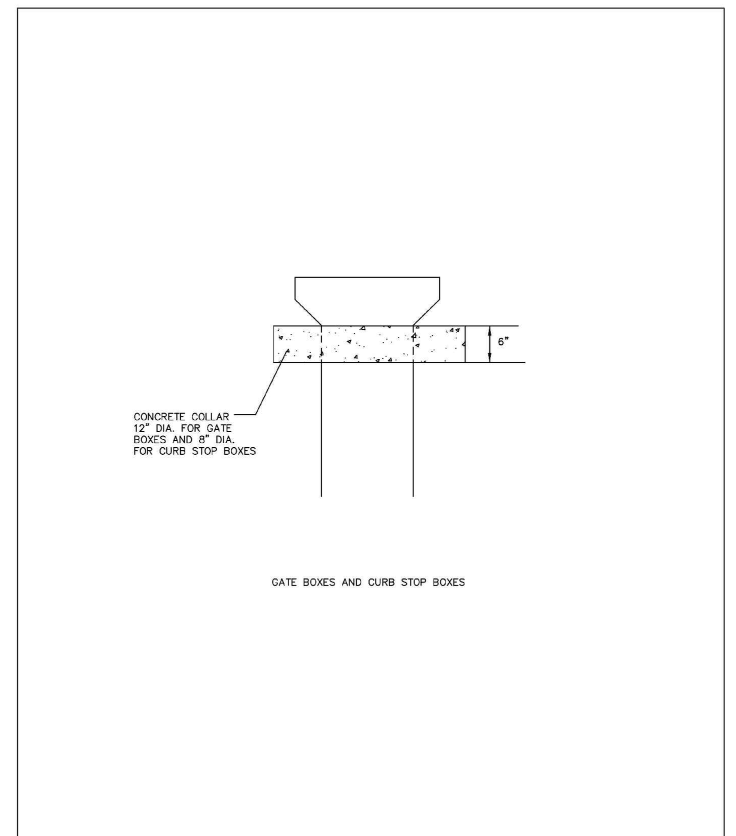

KENT COUNTY WATER AUTHORITY
KCWA "proudly serving"
CONCRETE COLLAR
NOT TO SCALE DATE: 09/2006
CONCCOLLAR.DWG

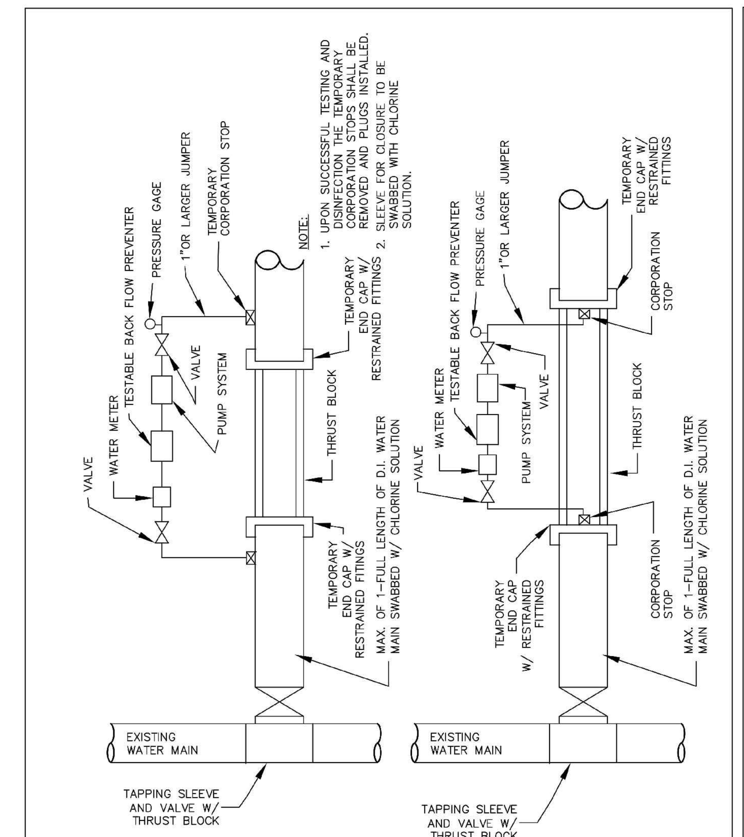

KENT COUNTY WATER AUTHORITY
KCWA "proudly serving"
TEMPORARY CONNECTION FOR PRESSURE TESTING AND DISINFECTION
NOT TO SCALE DATE: 09/2006
TEMPCONF.DWG

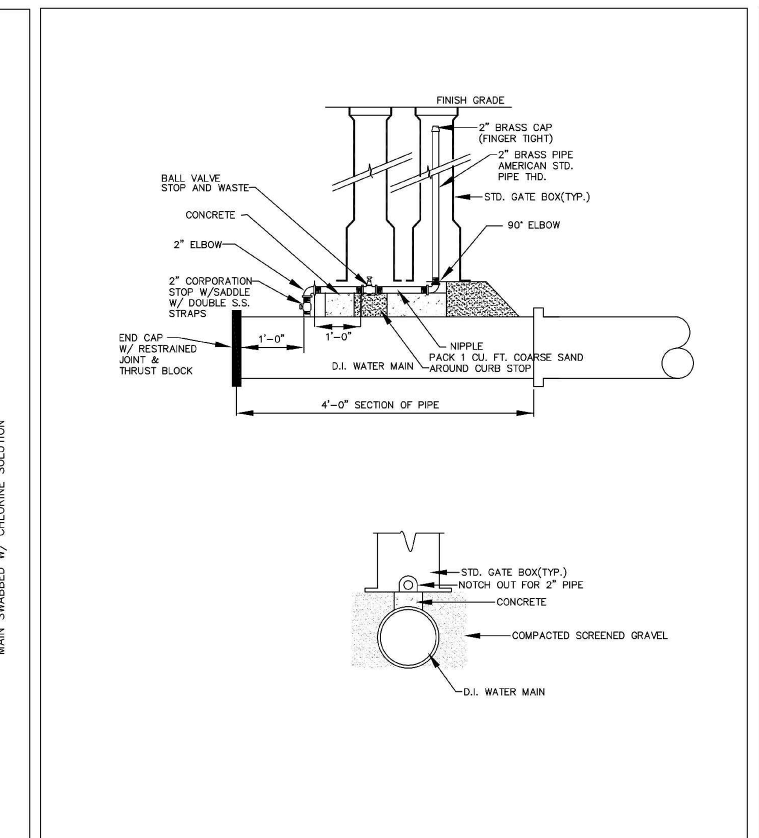

KENT COUNTY WATER AUTHORITY
KCWA "proudly serving"
PERMANENT BLOWOFF ASSEMBLY
NOT TO SCALE DATE: 09/2006
PBLOWOFF.DWG

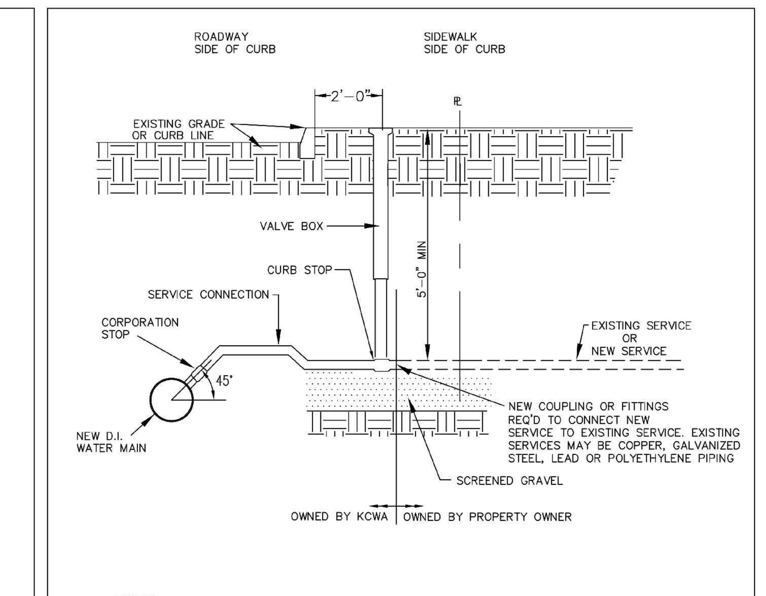

KENT COUNTY WATER AUTHORITY
KCWA "proudly serving"
SERVICE CONNECTION
NOT TO SCALE DATE: 09/2006
SERCONET.DWG

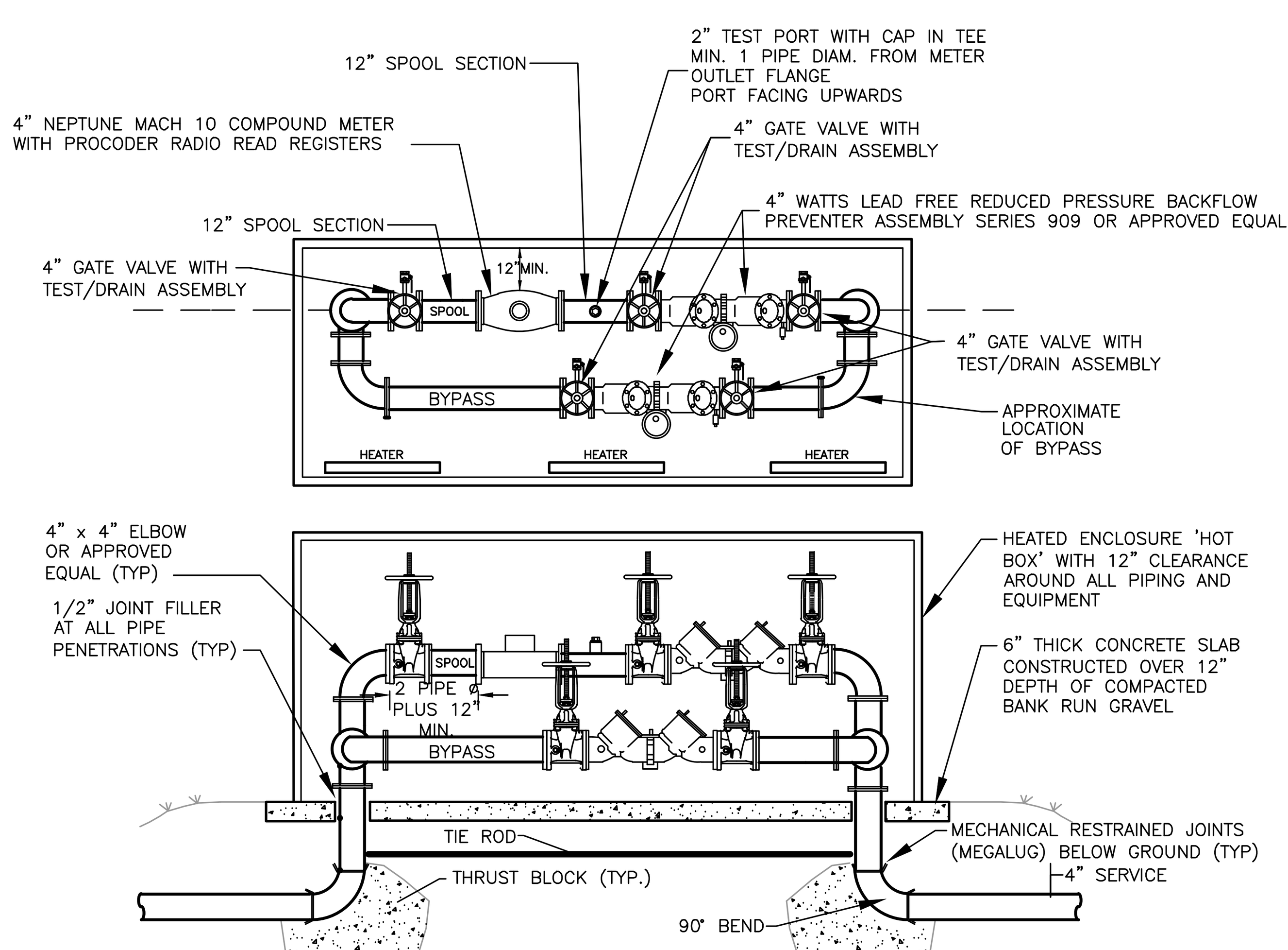

NOTES:
1. SUBMIT SHOP DRAWINGS FOR REVIEW AND APPROVAL OF ENTIRE MASTER METER ENCLOSURE, ASSEMBLY AND HEATING SYSTEM.
2. ALL WORK AND MATERIALS SHALL BE PERFORMED IN ACCORDANCE WITH KCWA STANDARDS.
3. INSTALL MASTER METER ENCLOSURE IN STRICT CONFORMANCE WITH MANUFACTURER'S INSTRUCTIONS.
4. PROVIDE NON-CORROSIVE SUPPORTS FOR RPZ AND METER (CONCRETE OR EQUAL).
5. ALL PIPING, VALVES AND EQUIPMENT SHALL BE RATED FOR 200 PSI WORKING PRESSURE OR GREATER AS SPECIFIED BY KCWA.
6. ENCLOSURE SHALL BE MANUFACTURED TO PREVENT FREEZING TEMPERATURES WITHIN ENCLOSURE WHEN OUTSIDE TEMPERATURES DROP TO -20F.
7. ENCLOSURE SHALL BE DESIGNED WITH 'FLIP TOPS' FOR EASY ACCESS AND MAINTENANCE.
8. ENCLOSURE SHALL BE DESIGNED WITH 'BLOW OUT PANELS' TO ACCOMMODATE RPZ FLOW RATES OF 320 GPM.
9. ENCLOSURE SHALL BE MANUFACTURED BY HOTBOX OR EQUAL.

ABOVE-GROUND WATER METER & BACKFLOW PREVENTION ENCLOSURE
NOT TO SCALE

OWNER/APPLICANT:
BOULDER HILL DEVELOPMENT, LLC
PATRICK CZERWIEN, MANAGER
57 PINE RIDGE DRIVE
CRANSTON, RI 02921
PHONE: (401) 413-5648

LEGAL COUNCIL:
MR. THOMAS CRONIN ESQ.
NOLAN, BRUNERO, CRONIN & FERRARA LTD.
1070 MAIN STREET
COVENTRY, RI 02816-5707
PHONE: (401) 828-5800

DRAWING ISSUE:
- ☐ CONCEPT
- ☐ CUSTOMER APPROVAL
- ☒ PERMITTING
- ☐ CONSTRUCTION
- ☐ AS-BUILT
- ☐ OTHER:

ONLY PLANS ISSUED FOR CONSTRUCTION SHALL BE USED FOR CONSTRUCTION

TIMOTHY J. BEHAN
STATE OF RHODE ISLAND
No 6278
HOPE
REGISTERED PROFESSIONAL ENGINEER
04/21/2026

REVISIONS

No.	DATE	DRWN	CHKD
1	07-29-25	SMA	TJB
2	07-31-25	SMA	TJB
3	09-02-25	SMA	TJB
4	09-11-25	SMA	TJB
5	11-07-25	SMA	TJB
6	12-04-25	SMA	TJB
7	12-24-25	SMA	TJB
8	01-27-26	SMA	TJB
9	03-31-26	SMA	TJB
10	04-21-26	SMA	TJB

COMMONWEALTH
ENGINEERS & CONSULTANTS, INC.
400 SMITH STREET
PROVIDENCE, RHODE ISLAND 02908
(401) 273-6600

PRELIMINARY PLAN APPLICATION COMPREHENSIVE PERMIT
FOR
SIENA CONDOMINIUMS
A.P. 45 LOTS 10, 11, 12 & 13
MAIN STREET
COVENTRY, RHODE ISLAND

CONSTRUCTION DETAILS-3

SCALE: AS SHOWN		SHEET NO: 15 OF 20
DRAWN BY: SMA	DESIGN BY: SMA	CHECKED BY: TJB
DATE: MARCH 27, 2025		PROJECT NO.: 25024.00

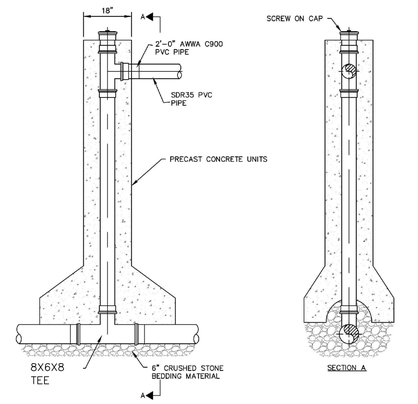

NOTES:
1. FOR AN EXISTING SEWER MAIN THAT DOES NOT HAVE A TEE INSTALLED, THE CONTRACTOR SHALL INSTALL A TEE

Town of West Warwick
Rhode Island

Figure WW-13
STANDARD DEEP HOUSE CONNECTION DETAIL
Standard Sanitary Sewer Requirements
Date: 2018 | Scale: No Scale

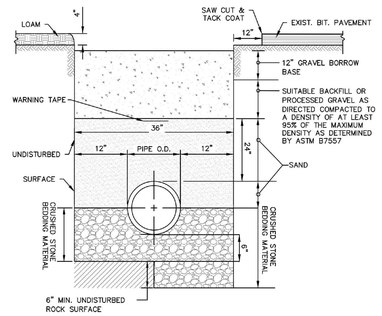

NOTES:
1. MINIMUM DEPTH OF COVER SHALL BE 4'-0"
2. PAVEMENT RESTORATION SHALL CONFORM TO THE DEPARTMENT OF PUBLIC WORKS REQUIREMENTS

Town of West Warwick
Rhode Island

Figure WW-1
TRENCH DETAIL
Standard Sanitary Sewer Requirements
Date: 2018 | Scale: No Scale

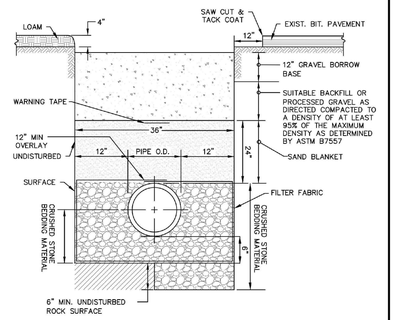

NOTES:
1. MINIMUM DEPTH OF COVER SHALL BE 4'-0"
2. PAVEMENT RESTORATION SHALL CONFORM TO THE DEPARTMENT OF PUBLIC WORKS REQUIREMENTS

Town of West Warwick
Rhode Island

Figure WW-2
TRENCH DETAIL WET CONDITION DETAIL
Standard Sanitary Sewer Requirements
Date: 2018 | Scale: No Scale

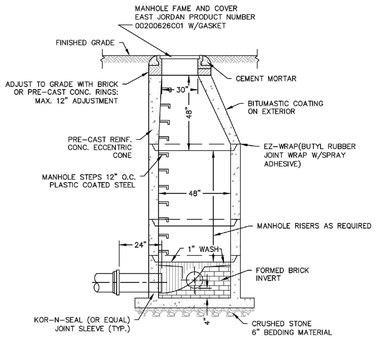

NOTES:
1. ALL LIFTING HOLES TO BE PLUGGED IN AND OUT WITH HYDRAULIC CEMENT

Town of West Warwick
Rhode Island

Figure WW-4
SEWER MANHOLE DETAIL
Standard Sanitary Sewer Requirements
Date: 2018 | Scale: No Scale

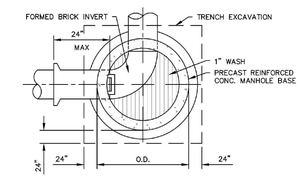

Town of West Warwick
Rhode Island

Figure WW-5
PRECAST MANHOLE DETAIL
Standard Sanitary Sewer Requirements
Date: 2018 | Scale: No Scale

TRELLEBORG SEALS & PROFILES

TRELLEBORG

Kor-N-Seal® I

106/406 Series Pipe-to-Manhole Connector

KEY FEATURES & BENEFITS

- **Most widely used flexible connector in sanitary sewer applications throughout the world**
- **Easy-to-Install**
- **Meets the specifications of ASTM C923**

PATENT

Patented Waveband technology creates a more effective seal by concentrating the compressive force of the expansion band. The rubber is "captured" between the band and the concrete. **Covered under U.S. Patent No. 5,738,359**

RECOMMENDED TORQUE VALUES

Connectors with 8" hole size and smaller:
Steel Wedge - 1/2" Socket Wrench - 8 ft. lbs.

Connectors with 10-20" hole sizes:
Ex Series - 1/2" Socket Wrench - 12 ft. lbs.
Steel Wedge - 1/2" Socket Wrench - 12 ft. lbs.

Preset torque limiters are available. Contact Custumer Service at 1-800-626-2180 for more information.

FOR LARGER PIPE SIZES REFER TO KOR-N-SEAL II SERIES CONNECTORS

206 Series – For pipe sizes 15" - 51" in diameter.
Larger sizes available – contact Customer Service.

306 Series – To fit larger pipe into smaller diameter manholes.

506 Series – Designed specifically for stormwater applications

USING CORRUGATED PIPE

Adapters are required when using Corrugated Pipe.
Refer to the Corrugated Pipe Adapter Data Sheet for details.

MAINTENANCE AND PROTECTION OF TRAFFIC NOTES:

1. THE CONTRACTOR SHALL BE RESPONSIBLE FOR ALL MAINTENANCE AND PROTECTION OF PEDESTRIAN AND VEHICLE TRAFFIC INCLUDING POLICE PROTECTION. ALL TEMPORARY AND VEHICULAR SIGNS, BARRICADES AND LANE CLOSURES SHALL BE IN CONFORMANCE WITH THE LATEST REVISIONS OF THE MANUAL OF UNIFORM TRAFFIC CONTROL DEVICES 2003 (M.U.T.C.D.) INCLUDING ALL REVISIONS.
2. TEMPORARY CONSTRUCTION SIGNS AND ALL APPLICABLE TRAFFIC CONTROL DEVICES SHALL BE IN PLACE PRIOR TO THE START OF WORK IN ANY AREA OPEN TO TRAFFIC.
3. THE PRIVATE VEHICLES OF CONSTRUCTION WORKERS WILL NOT BE PARKED IN THE STATE RIGHT-OF-WAY.
4. SIGN MOUNTINGS SHALL BE IN ACCORDANCE WITH THE R.I.D.O.T. SPECIFICATIONS FOR TEMPORARY CONSTRUCTION SIGNS.

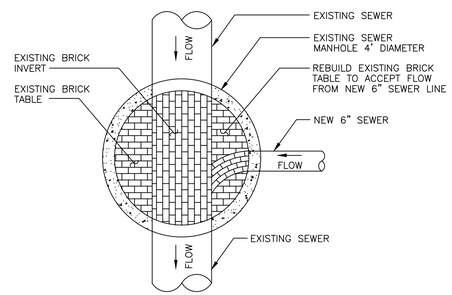

PLAN

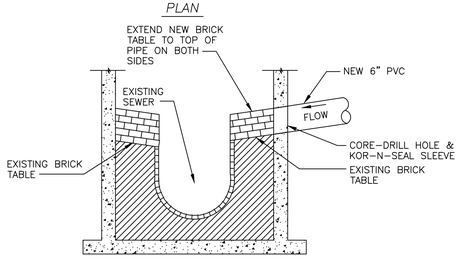

SECTION

RECONSTRUCTION OF BRICK INVERT

NOT TO SCALE

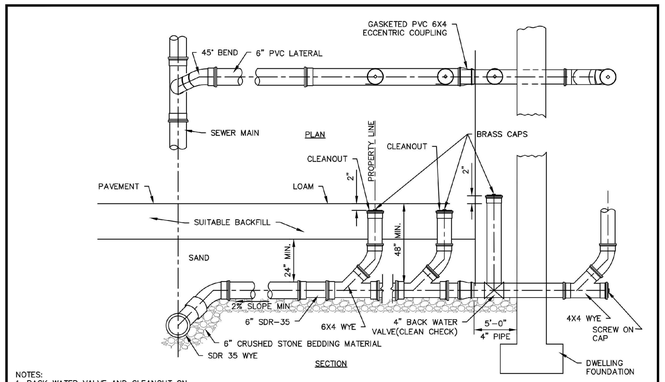

NOTES:
1. BACK WATER VALVE AND CLEANOUT ON PAVEMENT SHALL HAVE HEAVY DUTY CLEANOUT COVERS

Town of West Warwick
Rhode Island

Figure WW-14
STANDARD HOUSE CONNECTION DETAIL
Standard Sanitary Sewer Requirements
Date: 2018 | Scale: No Scale

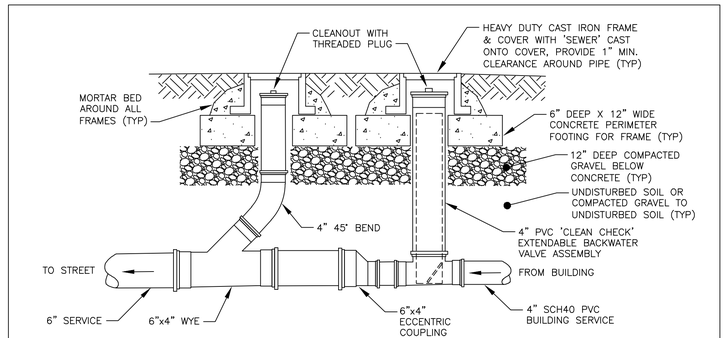

NOTE: INSTALL BACKWATER VALVE AND CLEANOUT AS CLOSE TO BUILDING AS POSSIBLE. EVERY GRAVITY BUILDING SEWER SHALL BE EQUIPPED WITH THIS ASSEMBLY.

EXTENDABLE BACKWATER VALVE & CLEAN OUT TYPICAL DETAIL

NOT TO SCALE

SEWER TRENCH MATERIAL SPECIFICATION:

1. BEDDING MATERIAL: THE BEDDING MATERIAL SHALL BE CRUSHED STONE CONSISTING OF DURABLE CRUSHED ROCK IN DURABLE CRUSHED GRAVEL STONE, FREE FROM ICE, SNOW, SAND, CLAY, LOAM, OR OTHER DELETERIOUS MATERIAL. THE CRUSHED STONE SHALL CONFORM TO THE FOLLOWING REQUIREMENTS:

PASSING 1-INCH SIEVE	100%
PASSING 3/4-INCH SIEVE	90-100%
PASSING 1/2-INCH SIEVE	20-25%
PASSING 3/8-INCH SIEVE	0-20%
PASSING NO. 4 SIEVE	0-5%

2. SAND BLANKET: THE SAND SHALL BE FREE FROM ICE, SNOW, ROOTS, RUBBISH, AND OTHER DELETERIOUS OR ORGANIC MATTER. THE SAND BLANKET SHALL CONFORM TO THE FOLLOWING REQUIREMENTS:

PASSING 1/4-INCH SIEVE	100%
PASSING NO. 20 SIEVE	30-60%
PASSING NO. 50 SIEVE	7-30%
PASSING NO. 100 SIEVE	3-8%

3. BACKFILL: BACKFILL SHALL BE EXCAVATED MATERIALS FREE-DRAINING CLEAN GRANULAR SOIL SUITABLE FOR BACKFILL. UP TO 20 PERCENT OF BACKFILL MATERIAL MAY BE ROCK-LIKE MATERIALS NOT TO EXCEED 0.05 CUBIC FEET IN VOLUME, NOR MORE THAN 3 INCHES IN LENGTH. THE BACKFILL SHALL NOT CONTAIN ANY DEBRIS, PAVEMENT, FROZEN MATERIAL, ORGANIC MATTER, OR PEAT.

SEWER NOTES:

1. ALL CONSTRUCTION, MATERIALS, SPECIFICATIONS, AND PROCEDURES SHALL CONFORM WITH THE TOWN OF WEST WARWICK SEWER ORDINANCE AND THE "STANDARD SANITARY SEWER REQUIREMENTS OF THE TOWN OF WEST WARWICK" AND ALL APPLICABLE FEDERAL, STATE AND TOWN BUILDING AND PLUMBING CODES. ANY DEVIATIONS FROM THESE PRESCRIBED PROCEDURES AND MATERIALS SHALL BE APPROVED BY THE SUPERINTENDENT BEFORE INSTALLATION. THE CONTRACTOR SHALL REVIEW SAID STANDARD PRIOR TO ANY WORK. THE SEWER AUTHORITY'S STANDARDS SUPERSEDE THESE DESIGN PLANS WHERE CONFLICTS EXIST.
2. PROTECTION OF WATER LINES:
   A. HORIZONTAL SEPARATION: SEWERS SHALL BE LAID AT A MINIMUM OF AT LEAST 10 FEET, HORIZONTALLY, FROM ANY EXISTING OR PROPOSED WATER MAIN OR SERVICE.
   B. VERTICAL SEPARATION: WHENEVER SEWERS CROSS UNDER WATER MAINS, OR SERVICES, THE SEWER SHALL BE LAID AT SUCH AN ELEVATION THAT THE TOP OF THE SEWER IS AT LEAST 18 INCHES BELOW THE BOTTOM OF THE WATER MAIN. SEWERS SHALL ALWAYS CROSS UNDER THE WATER MAIN OR SERVICE.
3. PIPE SHALL BE LAID IN THE DRY AND AT NO TIME SHALL WATER IN THE TRENCH BE PERMITTED TO FLOW INTO THE SEWER.
4. BACKFILL FROM THE CENTERLINE OF THE PIPE TO A HEIGHT OF TWO FEET ABOVE THE PIPE SHALL BE SAND BLANKET MATERIAL PLACED EVENLY FOR THE FULL WIDTH OF THE TRENCH AND COMPACTED IN 12-INCH LAYERS. THE REMAINDER OF THE TRENCH SHALL BE BACKFILLED EVENLY WITH SUITABLE (EXCAVATED OR BORROW) BACKFILL MATERIAL AND COMPACTED IN 12-INCH LAYERS. CUSHION AND BACKFILL MATERIAL SHALL BE COMPACTED TO 95% MAXIMUM DENSITY BY TAMPING AND COMPACTING IN LAYERS (ONE (1) FOOT MAXIMUM) TO ACHIEVE THE REQUIRED COMPACTION.
5. THE CONTRACTOR SHALL SUBMIT TO THE TOWN OF WEST WARWICK AN AS-BUILT DRAWING OF THE ENTIRE SEWER SYSTEM AFTER COMPLETION OF THE SERVICE CONNECTIONS UTILIZING DISTANCES FROM PERMANENT STRUCTURES. THE DEPTH OF THE SEWER MAIN AT THE PROPERTY LINE AND AT THE DWELLING UNIT SHALL BE RECORDED AS WELL AS TIES TO ALL CLEANOUTS AND BENDS.
6. ALL GRAVITY PIPE AND FITTINGS SHALL BE PVC SDR35 MEETING ASTM D3034 UNLESS NOTED OTHERWISE.
7. ALL BUILDING SEWER CONNECTION INSTALLATIONS SHALL BE GAS AND WATER TIGHT AND VERIFIED BY PROPER TESTING. TEST MUST BE WITNESSED BY THE TOWN OF WEST WARWICK PUBLIC WORKS SUPERINTENDENT.
8. BACKFLOW PREVENTER: ALL CONNECTIONS ARE TO BE EQUIPPED WITH A BACKFLOW PREVENTER. BACKFLOW PREVENTERS MUST CONFORM WITH THE TOWN OF WEST WARWICK BUILDING INSPECTOR'S REQUIREMENTS AND THE BUILDING OFFICIALS CODE ADMINISTRATORS BASIC NATIONAL PLUMBING CODE, ARTICLE 10, SECTION P-1003.0.
9. INSPECTION: ALL SEWER LINE CONSTRUCTION SHALL BE INSPECTED BY THE TOWN OF WEST WARWICK SEWER AUTHORITY PRIOR TO BACKFILLING.
10. TESTING: THE CONTRACTOR WILL BE REQUIRED TO PERFORM THE PIPE DEFLECTION TEST ON EACH SECTION OF PIPE INSTALLED. ALL TESTING SHALL BE WITNESSED BY THE TOWN OF WEST WARWICK PUBLIC WORKS SUPERINTENDENT OR THE SEWER AUTHORITY. NO SEWER FLOWS ARE ALLOWED UNTIL AUTHORIZED BY THE TOWN OF WEST WARWICK SEWER AUTHORITY.
11. MAINTENANCE OF SEWAGE FLOWS: THE CONTRACTOR SHALL MAINTAIN SEWAGE FLOWS ON SUBJECT SITE UNTIL ALL WORK HAS BEEN ACCEPTED BY THE SEWER AUTHORITY. SEWAGE DISCHARGES OR OVERFLOWS ARE STRICTLY PROHIBITED.

OWNER/APPLICANT:
BOULDER HILL DEVELOPMENT, LLC
PATRICK CZERWIEN, MANAGER
57 PINE RIDGE DRIVE
CRANSTON, RI 02921
PHONE: (401) 413-5648

LEGAL COUNCIL:
MR. THOMAS CRONIN ESQ.
NOLAN, BRUNERO, CRONIN & FERRARA LTD.
1070 MAIN STREET
COVENTRY, RI 02816-5707
PHONE: (401) 828-5800

DRAWING ISSUE:

- ☐ CONCEPT
- ☐ CUSTOMER APPROVAL
- ☒ PERMITTING
- ☐ CONSTRUCTION
- ☐ AS-BUILT
- ☐ OTHER:

ONLY PLANS ISSUED FOR CONSTRUCTION SHALL BE USED FOR CONSTRUCTION

TIMOTHY J. BEHAN
No. 6278
REGISTERED PROFESSIONAL ENGINEER
04/21/2026

REVISIONS

No.	DATE	DRWN	CHKD
1	07-29-25	SMA	TJB
2	07-31-25	SMA	TJB
3	09-02-25	SMA	TJB
4	09-11-25	SMA	TJB
5	11-07-25	SMA	TJB
6	12-04-25	SMA	TJB
7	12-24-25	SMA	TJB
8	01-27-26	SMA	TJB
9	03-31-26	SMA	TJB
10	04-21-26	SMA	TJB

COMMONWEALTH ENGINEERS & CONSULTANTS, INC.
400 SMITH STREET
PROVIDENCE, RHODE ISLAND 02908
(401) 273-6600

PRELIMINARY PLAN APPLICATION
COMPREHENSIVE PERMIT
FOR
SIENA CONDOMINIUMS
A.P. 45 LOTS 10, 11, 12 & 13
MAIN STREET
COVENTRY, RHODE ISLAND

CONSTRUCTION DETAILS-4

SCALE: AS SHOWN		SHEET NO: 16 OF 20
DRAWN BY: SMA	DESIGN BY: SMA	CHECKED BY: TJB
DATE: MARCH 27, 2025		PROJECT NO.: 25024.00

DRAINAGE SYSTEM–INSPECTION, MAINTENANCE & REPAIR:

1. SUBJECT PROPERTY OWNER SHALL MAINTAIN THE PROPOSED DRAINAGE SYSTEM COMPONENTS. A LEGALLY BINDING AND ENFORCEABLE MAINTENANCE AGREEMENT SHALL BE EXECUTED BETWEEN THE OWNER AND A MAINTENANCE COMPANY TRAINED AND EXPERIENCED WITH THE MAINTENANCE REQUIREMENTS DETAILED IN THE "RHODE ISLAND STORMWATER DESIGN AND INSTALLATION STANDARDS MANUAL", LATEST EDITION KNOWN AS THE "MANUAL".

2. INSPECTIONS ARE ESSENTIAL FOR THE LONGEVITY OF THE DRAINAGE SYSTEMS. THE DRAINAGE SYSTEM SHOULD BE INSPECTED IN ACCORDANCE WITH THE "MANUAL" BY THE MAINTENANCE COMPANY. RECORDS OF INSPECTIONS SHALL BE MAINTAINED BY THE OWNER AND MAINTENANCE COMPANY. IN NO CASE SHALL LESS THAN TWO INSPECTIONS OCCUR EACH CALENDAR YEAR, TYPICALLY SPRING AND FALL. THE ENTIRE SYSTEM SHALL ALSO BE INSPECTED AFTER STORM EVENTS GREATER THAN OR EQUAL TO THE 1–YEAR, 24–HOUR TYPE III PRECIPITATION EVENT (2.7 INCHES OF RAIN).

3. INSPECTIONS SHALL BE IN ACCORDANCE WITH THE "MANUAL". A SUMMARY OF THE REQUIREMENTS ARE DESCRIBED BELOW THE MAJORITY OF WHICH IS TAKEN DIRECTLY FROM THE "MANUAL". THE INSPECTOR SHALL REFER TO THE "MANUAL" FOR ADDITIONAL INSIGHT ON INSPECTION METHODS AND REQUIREMENTS. ALL CHECKLISTS IN THE MANUAL SHALL BE FILLED OUT BY THE INSPECTOR. ALL DEFICIENCIES DISCOVERED SHALL BE BROUGHT TO THE OWNER'S ATTENTION IN WRITING.

DRAIN MANHOLES & CATCH BASINS:

A. REMOVE TRASH AND LITTER.
B. REPAIR ALL STRUCTURAL DEFECTS IMMEDIATELY.
C. REMOVE ALL ACCUMULATED SEDIMENT AND DISPOSED OFF–SITE IN ACCORDANCE WITH STATE & FEDERAL REGULATIONS.

PIPES:

A. ALL CLOGGED OR SEDIMENT FILLED PIPES WHICH ARE MORE THAN 10% SEDIMENT FILLED SHALL BE CLEANED OUT IMMEDIATELY. WHEN CLEANING OUT PIPES, ENSURE DOWNSTREAM AREAS ARE PROTECTED FROM SEDIMENT DISCHARGES. DISPOSE OFF–SITE IN ACCORDANCE WITH STATE & FEDERAL REGULATIONS.
B. REMOVE TRASH AND LITTER.

INFILTRATION UNITS

THE FOLLOWING GUIDELINES SHALL BE ADHERED TO FOR THE OPERATION AND MAINTENANCE OF THE CULTEC STORMWATER MANAGEMENT SYSTEM:
A. THE OWNER SHALL KEEP A MAINTENANCE LOG WHICH SHALL INCLUDE DETAILS OF ANY EVENTS THAT HAVE AN EFFECT ON THE SYSTEM'S OPERATIONAL CAPACITY.
B. THE OPERATION AND MAINTENANCE PROCEDURE SHALL BE REVIEWED PERIODICALLY AND CHANGED TO MEET SITE CONDITIONS.
C. MAINTENANCE OF THE STORMWATER MANAGEMENT SYSTEM SHALL BE PERFORMED BY QUALIFIED WORKERS AND SHALL FOLLOW APPLICABLE OCCUPATIONAL HEALTH AND SAFETY REQUIREMENTS.
D. DEBRIS REMOVED FROM THE STORMWATER MANAGEMENT SYSTEM SHALL BE DISPOSED OF IN ACCORDANCE WITH APPLICABLE LAWS AND REGULATIONS.

SUGGESTED MAINTENANCE SCHEDULES

A. MONTHLY IN FIRST YEAR: CHECK INLETS AND OUTLETS FOR CLOGGING AND REMOVE ANY DEBRIS, AS REQUIRED.
B. SPRING AND FALL: CHECK INLETS AND OUTLETS FOR CLOGGING AND REMOVE ANY DEBRIS, AS REQUIRED.
C. ONE YEAR AFTER COMMISSIONING AND EVERY THIRD YEAR FOLLOWING: CHECK INLETS AND OUTLETS FOR CLOGGING AND REMOVE ANY DEBRIS, AS REQUIRED.

ISOLATOR INSPECTION & MAINTENANCE

STEP 1) INSPECT ISOLATOR ROW PLUS FOR SEDIMENT
- A. INSPECTION PORTS (IF PRESENT)
  - A.1. REMOVE/OPEN LID ON NYLOPLAST INLINE DRAIN
  - A.2. REMOVE AND CLEAN FLEXSTORM FILTER IF INSTALLED
  - A.3. USING A FLASHLIGHT AND STADIA ROD, MEASURE DEPTH OF SEDIMENT AND RECORD ON MAINTENANCE LOG
  - A.4. LOWER A CAMERA INTO ISOLATOR ROW PLUS FOR VISUAL INSPECTION OF SEDIMENT LEVELS (OPTIONAL)
  - A.5. IF SEDIMENT IS AT, OR ABOVE, 3" (80 mm) PROCEED TO STEP 2. IF NOT, PROCEED TO STEP 3.
- B. ALL ISOLATOR PLUS ROWS
  - B.1. REMOVE COVER FROM STRUCTURE AT UPSTREAM END OF ISOLATOR ROW PLUS
  - B.2. USING A FLASHLIGHT, INSPECT DOWN THE ISOLATOR ROW PLUS THROUGH OUTLET PIPE
    - i) MIRRORS ON POLES OR CAMERAS MAY BE USED TO AVOID A CONFINED SPACE ENTRY
    - ii) FOLLOW OSHA REGULATIONS FOR CONFINED SPACE ENTRY IF ENTERING MANHOLE
  - B.3. IF SEDIMENT IS AT, OR ABOVE, 3" (80 mm) PROCEED TO STEP 2. IF NOT, PROCEED TO STEP 3.

STEP 2) CLEAN OUT ISOLATOR ROW PLUS USING THE JETVAC PROCESS
- A. A FIXED CULVERT CLEANING NOZZLE WITH REAR FACING SPREAD OF 45" (1.1 m) OR MORE IS PREFERRED
- B. APPLY MULTIPLE PASSES OF JETVAC UNTIL BACK FLUSH WATER IS CLEAN
- C. VACUUM STRUCTURE SUMP AS REQUIRED

STEP 3) REPLACE ALL COVERS, GRATES, FILTERS, AND LIDS; RECORD OBSERVATIONS AND ACTIONS.

STEP 4) INSPECT AND CLEAN BASINS AND MANHOLES UPSTREAM OF THE STORMTECH SYSTEM.

NOTES

1. INSPECT EVERY 6 MONTHS DURING THE FIRST YEAR OF OPERATION. ADJUST THE INSPECTION INTERVAL BASED ON PREVIOUS OBSERVATIONS OF SEDIMENT ACCUMULATION AND HIGH WATER ELEVATIONS.
2. CONDUCT JETTING AND VACTORING ANNUALLY OR WHEN INSPECTION SHOWS THAT MAINTENANCE IS NECESSARY.

SC-310 & SC-740 STORMTECH CHAMBER SPECIFICATIONS

1. CHAMBERS SHALL BE STORMTECH SC-310 & SC-740.
2. CHAMBERS SHALL BE ARCH-SHAPED AND SHALL BE MANUFACTURED FROM VIRGIN, IMPACT-MODIFIED POLYPROPYLENE COPOLYMERS.
3. CHAMBERS SHALL MEET THE REQUIREMENTS OF ASTM F2418-16a, "STANDARD SPECIFICATION FOR POLYPROPYLENE (PP) CORRUGATED WALL STORMWATER COLLECTION CHAMBERS".
4. CHAMBER ROWS SHALL PROVIDE CONTINUOUS, UNOBSTRUCTED INTERNAL SPACE WITH NO INTERNAL SUPPORTS THAT WOULD IMPEDE FLOW OR LIMIT ACCESS FOR INSPECTION.
5. THE STRUCTURAL DESIGN OF THE CHAMBERS, THE STRUCTURAL BACKFILL, AND THE INSTALLATION REQUIREMENTS SHALL ENSURE THAT THE LOAD FACTORS SPECIFIED IN THE AASHTO LRFD BRIDGE DESIGN SPECIFICATIONS, SECTION 12.12, ARE MET FOR: 1) LONG-DURATION DEAD LOADS AND 2) SHORT-DURATION LIVE LOADS, BASED ON THE AASHTO DESIGN TRUCK WITH CONSIDERATION FOR IMPACT AND MULTIPLE VEHICLE PRESENCES.
6. CHAMBERS SHALL BE DESIGNED, TESTED AND ALLOWABLE LOAD CONFIGURATIONS DETERMINED IN ACCORDANCE WITH ASTM F2787, "STANDARD PRACTICE FOR STRUCTURAL DESIGN OF THERMOPLASTIC CORRUGATED WALL STORMWATER COLLECTION CHAMBERS". LOAD CONFIGURATIONS SHALL INCLUDE: 1) INSTANTANEOUS (<1 MIN) AASHTO DESIGN TRUCK LIVE LOAD ON MINIMUM COVER 2) MAXIMUM PERMANENT (75-YR) COVER LOAD AND 3) ALLOWABLE COVER WITH PARKED (1-WEEK) AASHTO DESIGN TRUCK.
7. REQUIREMENTS FOR HANDLING AND INSTALLATION:
   - TO MAINTAIN THE WIDTH OF CHAMBERS DURING SHIPPING AND HANDLING, CHAMBERS SHALL HAVE INTEGRAL, INTERLOCKING STACKING LUGS.
   - TO ENSURE A SECURE JOINT DURING INSTALLATION AND BACKFILL, THE HEIGHT OF THE CHAMBER JOINT SHALL NOT BE LESS THAN 2".
   - TO ENSURE THE INTEGRITY OF THE ARCH SHAPE DURING INSTALLATION, a) THE ARCH STIFFNESS CONSTANT AS DEFINED IN SECTION 6.2.8 OF ASTM F2418 SHALL BE GREATER THAN OR EQUAL TO 550 LBS/IN/IN. AND b) TO RESIST CHAMBER DEFORMATION DURING INSTALLATION AT ELEVATED TEMPERATURES (ABOVE 73° F / 23° C), CHAMBERS SHALL BE PRODUCED FROM REFLECTIVE GOLD OR YELLOW COLORS.
8. ONLY CHAMBERS THAT ARE APPROVED BY THE SITE DESIGN ENGINEER WILL BE ALLOWED. UPON REQUEST BY THE SITE DESIGN ENGINEER OR OWNER, THE CHAMBER MANUFACTURER SHALL SUBMIT A STRUCTURAL EVALUATION FOR APPROVAL BEFORE DELIVERING CHAMBERS TO THE PROJECT SITE AS FOLLOWS:
   - THE STRUCTURAL EVALUATION SHALL BE SEALED BY A REGISTERED PROFESSIONAL ENGINEER.
   - THE STRUCTURAL EVALUATION SHALL DEMONSTRATE THAT THE SAFETY FACTORS ARE GREATER THAN OR EQUAL TO 1.95 FOR DEAD LOAD AND 1.75 FOR LIVE LOAD, THE MINIMUM REQUIRED BY ASTM F2787 AND BY SECTIONS 3 AND 12.12 OF THE AASHTO LRFD BRIDGE DESIGN SPECIFICATIONS FOR THERMOPLASTIC PIPE.
   - THE TEST DERIVED CREEP MODULUS AS SPECIFIED IN ASTM F2418 SHALL BE USED FOR PERMANENT DEAD LOAD DESIGN EXCEPT THAT IT SHALL BE THE 75-YEAR MODULUS USED FOR DESIGN.
9. CHAMBERS AND END CAPS SHALL BE PRODUCED AT AN ISO 9001 CERTIFIED MANUFACTURING FACILITY.

IMPORTANT - NOTES FOR THE BIDDING AND INSTALLATION OF THE SC-310 & SC-740 SYSTEM

1. STORMTECH SC-310 & SC-740 CHAMBERS SHALL NOT BE INSTALLED UNTIL THE MANUFACTURER'S REPRESENTATIVE HAS COMPLETED A PRE-CONSTRUCTION MEETING WITH THE INSTALLERS.
2. STORMTECH SC-310 & SC-740CHAMBERS SHALL BE INSTALLED IN ACCORDANCE WITH THE "STORMTECH SC-310/SC-740/DC-780 CONSTRUCTION GUIDE".
3. CHAMBERS ARE NOT TO BE BACKFILLED WITH A DOZER OR AN EXCAVATOR SITUATED OVER THE CHAMBERS. STORMTECH RECOMMENDS 3 BACKFILL METHODS:
   - STONESHOOTER LOCATED OFF THE CHAMBER BED.
   - BACKFILL AS ROWS ARE BUILT USING AN EXCAVATOR ON THE FOUNDATION STONE OR SUBGRADE.
   - BACKFILL FROM OUTSIDE THE EXCAVATION USING A LONG BOOM HOE OR EXCAVATOR.
4. THE FOUNDATION STONE SHALL BE LEVELED AND COMPACTED PRIOR TO PLACING CHAMBERS.
5. JOINTS BETWEEN CHAMBERS SHALL BE PROPERLY SEATED PRIOR TO PLACING STONE.
6. MAINTAIN MINIMUM - 6" (150 mm) SPACING BETWEEN THE CHAMBER ROWS.
7. EMBEDMENT STONE SURROUNDING CHAMBERS MUST BE A **WASHED, CLEAN**, CRUSHED, ANGULAR STONE 3/4-2" (20-50 mm).
8. THE CONTRACTOR MUST REPORT ANY DISCREPANCIES WITH CHAMBER FOUNDATION MATERIALS BEARING CAPACITIES TO THE SITE DESIGN ENGINEER.
9. ADS RECOMMENDS THE USE OF "FLEXSTORM CATCH IT" INSERTS DURING CONSTRUCTION FOR ALL INLETS TO PROTECT THE SUBSURFACE STORMWATER MANAGEMENT SYSTEM FROM CONSTRUCTION SITE RUNOFF.

NOTES FOR CONSTRUCTION EQUIPMENT

1. STORMTECH SC-310 & SC-740CHAMBERS SHALL BE INSTALLED IN ACCORDANCE WITH THE "STORMTECH SC-310/SC-740/DC-780 CONSTRUCTION GUIDE".
2. THE USE OF CONSTRUCTION EQUIPMENT OVER SC310 & SC–740 CHAMBERS IS LIMITED:
   - NO EQUIPMENT IS ALLOWED ON BARE CHAMBERS.
   - NO RUBBER TIRED LOADERS, DUMP TRUCKS, OR EXCAVATORS ARE ALLOWED UNTIL PROPER FILL DEPTHS ARE REACHED IN ACCORDANCE WITH THE "STORMTECH SC-310/SC-740/DC-780 CONSTRUCTION GUIDE".
   - WEIGHT LIMITS FOR CONSTRUCTION EQUIPMENT CAN BE FOUND IN THE "STORMTECH SC-310/SC-740/DC-780 CONSTRUCTION GUIDE".
3. FULL 36" (900 mm) OF STABILIZED COVER MATERIALS OVER THE CHAMBERS IS REQUIRED FOR DUMP TRUCK TRAVEL OR DUMPING.

USE OF A DOZER TO PUSH EMBEDMENT STONE BETWEEN THE ROWS OF CHAMBERS MAY CAUSE DAMAGE TO THE CHAMBERS AND IS NOT AN ACCEPTABLE BACKFILL METHOD. ANY CHAMBERS DAMAGED BY THE "DUMP AND PUSH" METHOD ARE NOT COVERED UNDER THE STORMTECH STANDARD WARRANTY.

CONTACT STORMTECH AT 1-888-892-2694 WITH ANY QUESTIONS ON INSTALLATION REQUIREMENTS OR WEIGHT LIMITS FOR CONSTRUCTION EQUIPMENT.

MATERIAL LOCATION		SPECIFICATION	COMPACTION
A	FOUNDATION STONE	WASHED, CLEAN, ANGULAR STONE 3/4" TO 2"	PLATE COMPACT OR ROLL TO ACHIEVE A FLAT SURFACE
B	EMBEDMENT STONE	WASHED, CLEAN, ANGULAR STONE 3/4" TO 2"	PLACE EVENLY IN 6" LIFTS, WALK INTO PLACE
C	BITUMINOUS PAVEMENT SUBGRADE	GRAVEL BURROW, R.I.DOT TYPE 1A OR 1B	MIN. 95% MAX. DENSITY AS DETERMINED BY MOD. PROCTOR

ACCEPTABLE FILL MATERIALS: STORMTECH SC–310 AND SC–740 CHAMBER SYSTEMS

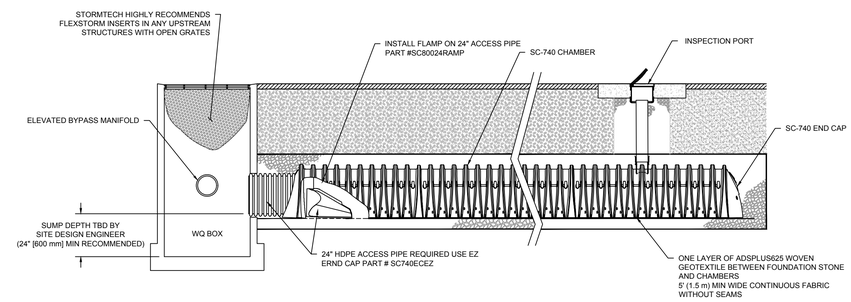

SC–740 ISOLATOR ROW PLUS DETAIL

NOT TO SCALE

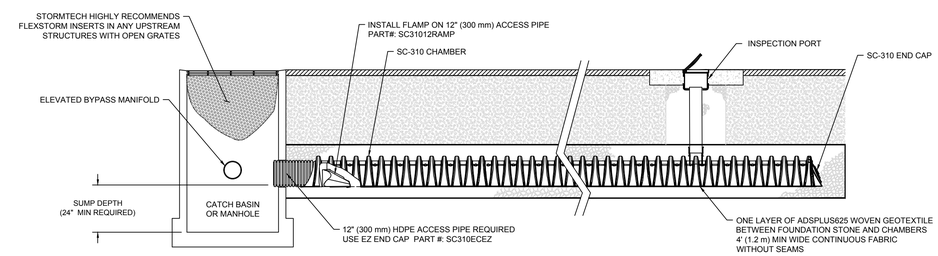

SC–310 ISOLATOR ROW PLUS DETAIL

NOT TO SCALE

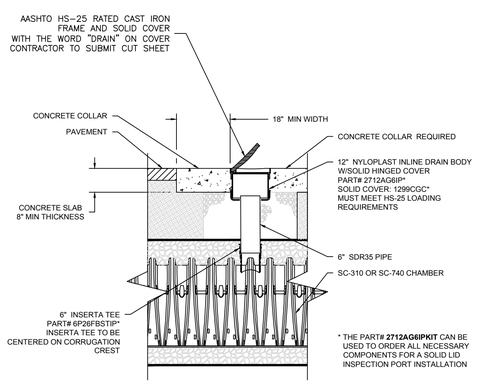

SC–310 & SC–740 6" INSPECTION PORT DETAIL

NOT TO SCALE

DRAINAGE NOTES:

1. SOME STRUCTURES MAY REQUIRE SHALLOW FRAMES (4–INCH HEIGHT).
2. SHALLOW FRAMES TO BE MECHANICALLY FASTENED (BOLTED) TO STRUCTURES.
3. MOST STRUCTURES REQUIRE FLAT TOPS.
4. ALL CATCH BASINS SHALL HAVE 3–FOOT SUMPS MEASURED BELOW LOWEST INVERT.
5. SHOP DRAWINGS SHALL BE SUBMITTED TO ENGINEER FOR ALL DRAINAGE COMPONENTS.
6. ENGINEER SHALL INSPECT THE BOTTOM OF EACH INFILTRATION AREA PRIOR TO PLACEMENT OF CRUSHED STONE.
7. ENGINEER SHALL BE NOTIFIED A MIN. OF 24 HOURS BEFORE CONSTRUCTING ANY INFILTRATION SYSTEM OR UNDERGROUND LINED SAND FILTERS.
8. ALL FILL AND UNSUITABLE MATERIAL SHALL BE REMOVED FROM BENEATH ALL INFILTRATION SYSTEMS.
9. ANY BACKFILL PLACED BELOW INFILTRATION SYSTEMS SHALL BE ASTM C–33 SAND.
10. SCARIFY BOTTOM PRIOR TO PLACEMENT OF STONE OR ASTM C–33 SAND.
11. DO NOT ALLOW SEDIMENT LADEN RUNOFF TO ENTER SYSTEM.
12. INSTALL FABRIC DROP OR SILT SACK IN EACH NEW CATCH BASIN AS FRAME AND GRATE IS INSTALLED.

RECOMMENDED MINIMUM TRENCH WIDTH

PIPE DIAMETER IN. (MM)	TRENCH WIDTH IN. (M)
4 – 8 (100–200)	*
10 (250)	24 (0.6)
12 (300)	28 (0.7)
15 (375)	35 (0.9)
18 (450)	43 (1.1)
24 (600)	56 (1.4)
30 (750)	60 (1.5)
36 (900)	65 (1.7)
42 (1050)	84 (2.1)
48 (1200)	91 (2.3)
54 (1350)	97 (2.5)
60 (1500)	103 (2.6)

* USUALLY BASED ON SMALLEST BUCKET SIZE AVAILABLE

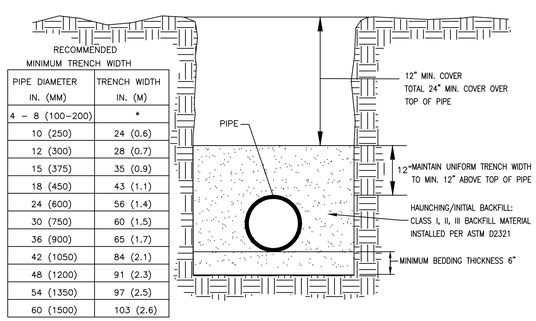

TYPICAL TRENCH INSTALLATION DETAIL

NOT TO SCALE

NOTE:

24–INCH COVER OVER THE CROWN OF THE PIPE IS PREFERRED, ADS N–12 HDPE PIPE MINIMUM COVER REQUIREMENTS (PER ASTM F2648) WITH AASHTO H–25 OR HS–25 LOAD FOR INSIDE DIAMETER OF 4" TO 48" MIN. COVER MAY BE REDUCED TO 12" (1–FOOT) OVER THE CROWN OF THE PIPE.

OWNER/APPLICANT:
BOULDER HILL DEVELOPMENT, LLC
PATRICK CZERWIEN, MANAGER
57 PINE RIDGE DRIVE
CRANSTON, RI 02921
PHONE: (401) 413–5648

LEGAL COUNCIL:
MR. THOMAS CRONIN ESQ.
NOLAN, BRUNERO, CRONIN & FERRARA LTD.
1070 MAIN STREET
COVENTRY, RI 02816–5707
PHONE: (401) 828–5800

DRAWING ISSUE:

- ☐ CONCEPT
- ☐ CUSTOMER APPROVAL
- ☒ PERMITTING
- ☐ CONSTRUCTION
- ☐ AS–BUILT
- ☐ OTHER:

ONLY PLANS ISSUED FOR CONSTRUCTION SHALL BE USED FOR CONSTRUCTION

TIMOTHY J. BEHAN
No. 6278
REGISTERED PROFESSIONAL ENGINEER
04/21/2026

REVISIONS

No.	DATE	DRWN	CHKD
1	07–29–25	SMA	TJB
2	07–31–25	SMA	TJB
3	09–02–25	SMA	TJB
4	09–11–25	SMA	TJB
5	11–07–25	SMA	TJB
6	12–04–25	SMA	TJB
7	12–24–25	SMA	TJB
8	01–27–26	SMA	TJB
9	03–31–26	SMA	TJB
10	04–21–26	SMA	TJB

COMMONWEALTH ENGINEERS & CONSULTANTS, INC.
400 SMITH STREET
PROVIDENCE, RHODE ISLAND 02908
(401) 273–6600

PRELIMINARY PLAN APPLICATION
COMPREHENSIVE PERMIT
FOR
SIENA CONDOMINIUMS
A.P. 45 LOTS 10, 11, 12 & 13
MAIN STREET
COVENTRY, RHODE ISLAND

CONSTRUCTION DETAILS–5

SCALE: AS SHOWN		SHEET NO: 17 OF 20
DRAWN BY: SMA	DESIGN BY: SMA	CHECKED BY: TJB
DATE: MARCH 27, 2025		PROJECT NO.: 25024.00

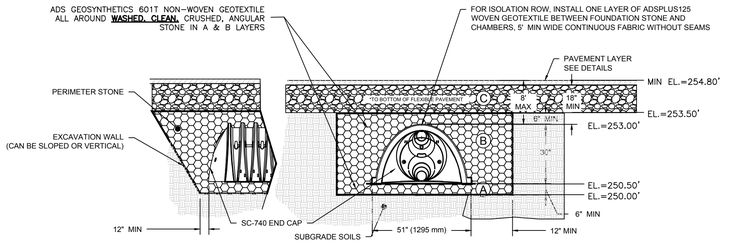

BMP-1: STORMTECH SC-740 ISOLATION CHAMBERS CROSS SECTION

NOT TO SCALE

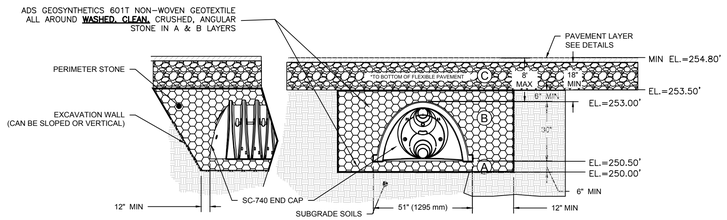

BMP-1: STORMTECH SC-740 INFILTRATION CHAMBERS CROSS SECTION

NOT TO SCALE

NOTE:
1. SYSTEM DIMENSION: 17.86(L)X 20.5(W)X 3.5'(H)
2. 4 ROWS OF 2 SC-740 CHAMBERS
3. 1-ROW INSTALLED AS AN ISOLATION ROW
4. 6" OF STONE BELOW THE CHAMBERS
5. 6" SPACING BETWEEN CHAMBERS
6. ESHGWT ELEV.=246.0±

BMP-1 WATER LEVELS

WQ=250.09'
1-YR=250.50'
10-YR=251.37'
25-YR=252.23'
100-YR=253.42'

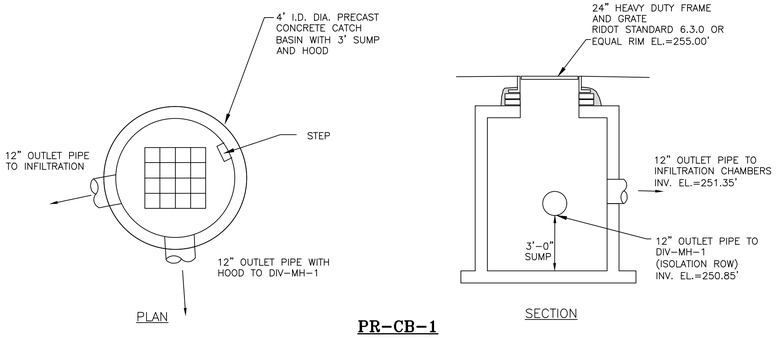

PR-CB-1

NOT TO SCALE

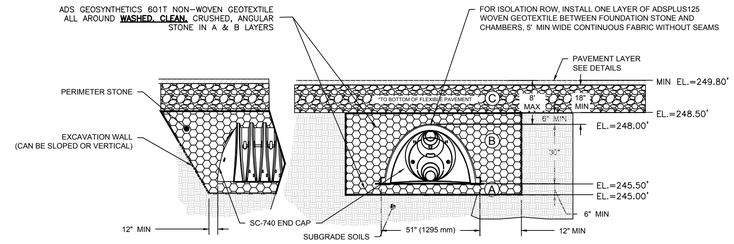

BMP-2: STORMTECH SC-740 ISOLATION CHAMBERS CROSS SECTION

NOT TO SCALE

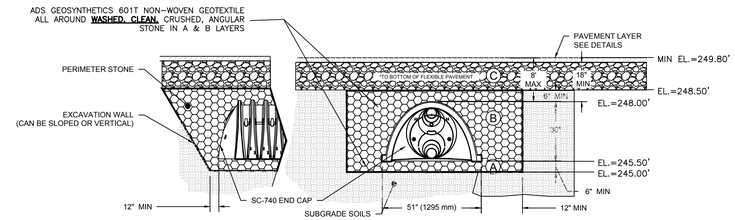

BMP-2: STORMTECH SC-740 INFILTRATION CHAMBERS CROSS SECTION

NOT TO SCALE

NOTE:
1. SYSTEM DIMENSION: 53.46(L)X 34.75(W)X 3.5'(H)
2. 7 ROWS OF 7 SC-740 CHAMBERS
3. 1-ROW INSTALLED AS AN ISOLATION ROW
4. 6" OF STONE BELOW THE CHAMBERS
5. 6" SPACING BETWEEN CHAMBERS
6. ESHGWT ELEV.=241.0±

BMP-2 WATER LEVELS

WQ=245.01'
1-YR=245.04'
10-YR=245.90'
25-YR=246.55'
100-YR=248.47'

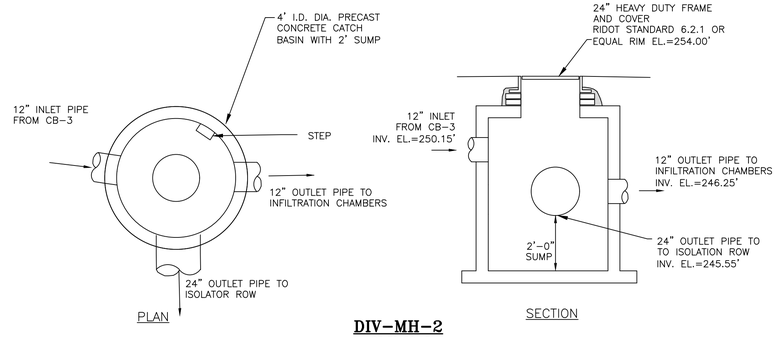

DIV-MH-2

NOT TO SCALE

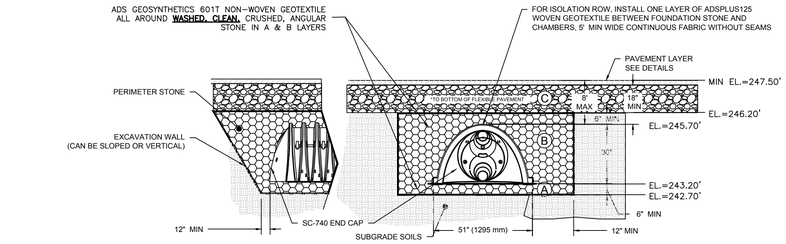

BMP-3: STORMTECH SC-740 ISOLATION CHAMBERS CROSS SECTION

NOT TO SCALE

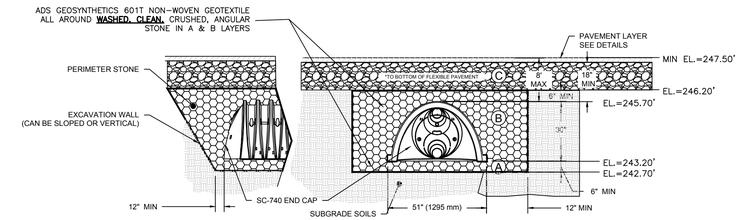

BMP-3: STORMTECH SC-740 INFILTRATION CHAMBERS CROSS SECTION

NOT TO SCALE

NOTE:
1. SYSTEM DIMENSION: 17.86(L)X 49.00(W)X 3.5'(H)
2. 10 ROWS OF 2 SC-740 CHAMBERS
3. 1-ROW INSTALLED AS AN ISOLATION ROW
4. 6" OF STONE BELOW THE CHAMBERS
5. 6" SPACING BETWEEN CHAMBERS
6. ESHGWT ELEV.=238.5±

BMP-3 WATER LEVELS

WQ=242.70'
1-YR=242.71'
10-YR=243.93'
25-YR=245.27'
100-YR=246.06'

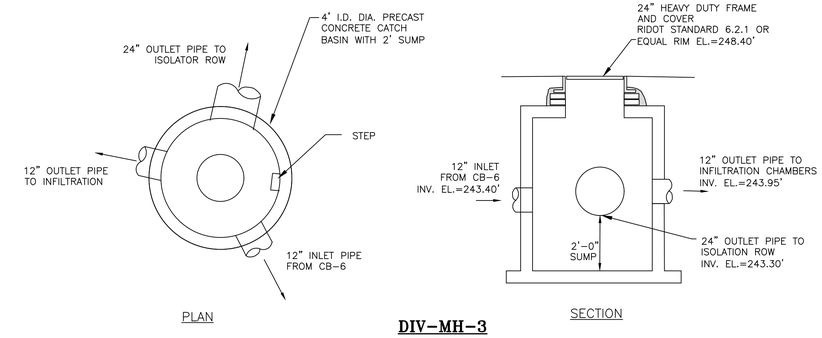

DIV-MH-3

NOT TO SCALE

OWNER/APPLICANT:
BOULDER HILL DEVELOPMENT, LLC
PATRICK CZERWIEN, MANAGER
57 PINE RIDGE DRIVE
CRANSTON, RI 02921
PHONE: (401) 413-5648

LEGAL COUNCIL:
MR. THOMAS CRONIN ESQ.
NOLAN, BRUNERO, CRONIN & FERRARA LTD.
1070 MAIN STREET
COVENTRY, RI 02816-5707
PHONE: (401) 828-5800

DRAWING ISSUE:

- [ ] CONCEPT
- [ ] CUSTOMER APPROVAL
- [x] PERMITTING
- [ ] CONSTRUCTION
- [ ] AS-BUILT
- [ ] OTHER:

ONLY PLANS ISSUED FOR CONSTRUCTION SHALL BE USED FOR CONSTRUCTION

TIMOTHY J. BEHAN
No. 6278
REGISTERED PROFESSIONAL ENGINEER
04/21/2026

REVISIONS

No.	DATE	DRWN	CHKD
1	07-29-25	SMA	TJB
2	07-31-25	SMA	TJB
3	09-02-25	SMA	TJB
4	09-11-25	SMA	TJB
5	11-07-25	SMA	TJB
6	12-04-25	SMA	TJB
7	12-24-25	SMA	TJB
8	01-27-26	SMA	TJB
9	03-31-26	SMA	TJB
10	04-21-26	SMA	TJB

COMMONWEALTH
ENGINEERS & CONSULTANTS, INC.
400 SMITH STREET
PROVIDENCE, RHODE ISLAND 02908
(401) 273-6600

PRELIMINARY PLAN APPLICATION
COMPREHENSIVE PERMIT
FOR
SIENA CONDOMINIUMS
A.P. 45 LOTS 10, 11, 12 & 13
MAIN STREET
COVENTRY, RHODE ISLAND

CONSTRUCTION DETAILS-6

SCALE: AS SHOWN		SHEET NO: 18 OF 20
DRAWN BY: SMA	DESIGN BY: SMA	CHECKED BY: TJB
DATE: MARCH 27, 2025		PROJECT NO.: 25024.00

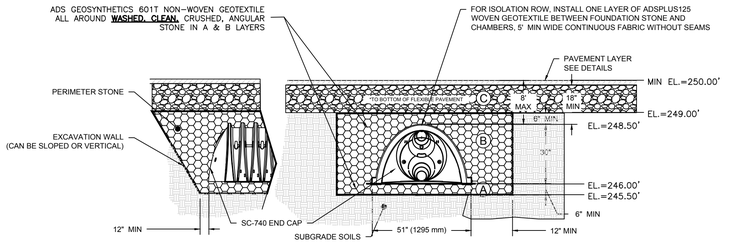

BMP-4: STORMTECH SC-740 ISOLATION CHAMBERS CROSS SECTION

NOT TO SCALE

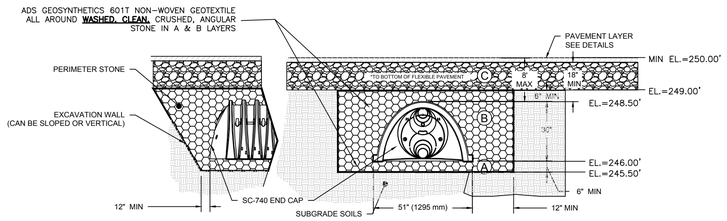

BMP-4: STORMTECH SC-740 INFILTRATION CHAMBERS CROSS SECTION

NOT TO SCALE

NOTE:
1. SYSTEM DIMENSION: 53.46(L)X 15.75(W)X 3.5'(H)
2. 3 ROWS OF 7 SC-740 CHAMBERS
3. 1-ROW INSTALLED AS AN ISOLATION ROW
4. 6" OF STONE BELOW THE CHAMBERS
5. 6" SPACING BETWEEN CHAMBERS
6. ESHGWT ELEV.=240.5±

BMP-4 WATER LEVELS

WQ=245.51'
1-YR=245.52'
10-YR=246.35'
25-YR=247.01'
100-YR=248.91'

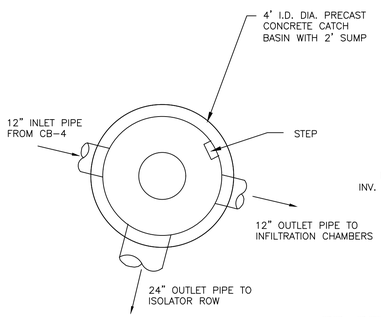

PLAN

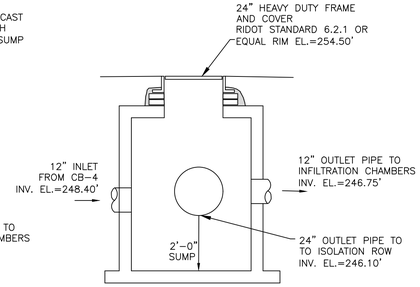

SECTION

PR-DIV-MH-4

NOT TO SCALE

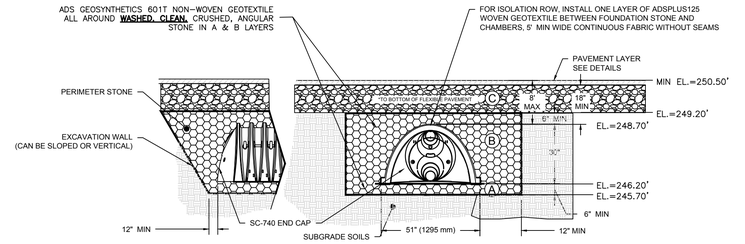

BMP-5: STORMTECH SC-740 ISOLATION CHAMBERS CROSS SECTION

NOT TO SCALE

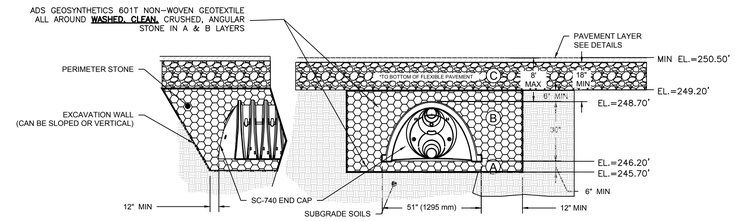

BMP-5: STORMTECH SC-740 INFILTRATION CHAMBERS CROSS SECTION

NOT TO SCALE

NOTE:
1. SYSTEM DIMENSION: 46.35(L)X 20.50(W)X 3.5'(H)
2. 4 ROWS OF 6 SC-740 CHAMBERS
3. 1-ROW INSTALLED AS AN ISOLATION ROW
4. 6" OF STONE BELOW THE CHAMBERS
5. 6" SPACING BETWEEN CHAMBERS
6. ESHGWT ELEV.=241.7±

BMP-5 WATER LEVELS

WQ=246.21'
1-YR=246.21'
10-YR=247.03'
25-YR=247.70'
100-YR=249.62'

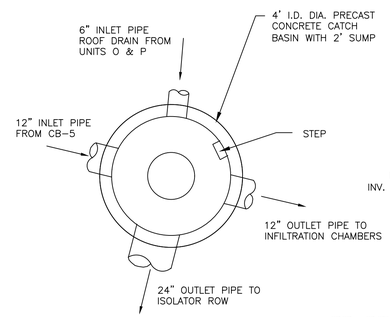

PLAN

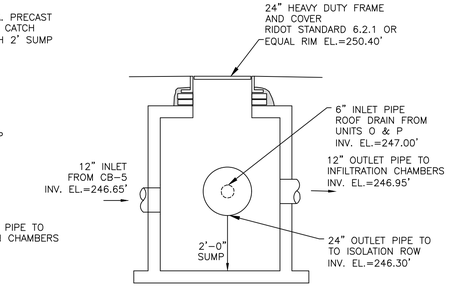

SECTION

PR-DIV-MH-5

NOT TO SCALE

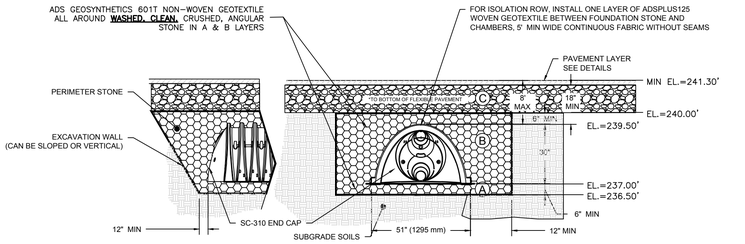

BMP-6: STORMTECH SC-310 ISOLATION CHAMBERS CROSS SECTION

NOT TO SCALE

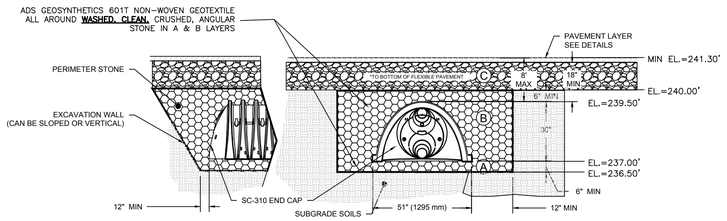

BMP-6: STORMTECH SC-310 INFILTRATION CHAMBERS CROSS SECTION

NOT TO SCALE

NOTE:
1. SYSTEM DIMENSION: 10.32(L)X 11.50(W)X 2.33'(H)
2. 3 ROWS OF 1 SC-310 CHAMBERS
3. 1-ROW INSTALLED AS AN ISOLATION ROW
4. 6" OF STONE BELOW THE CHAMBERS
5. 6" SPACING BETWEEN CHAMBERS
6. ESHGWT ELEV.=232.5±

BMP-6 WATER LEVELS

WQ=236.63'
1-YR=238.76'
10-YR=238.78'
25-YR=238.79'
100-YR=238.81'

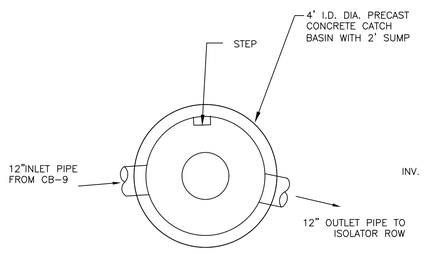

PLAN

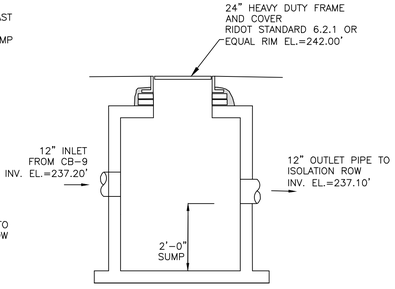

SECTION

DIV-MH-6

NOT TO SCALE

OWNER/APPLICANT:
BOULDER HILL DEVELOPMENT, LLC
PATRICK CZERWIEN, MANAGER
57 PINE RIDGE DRIVE
CRANSTON, RI 02921
PHONE: (401) 413-5648

LEGAL COUNCIL:
MR. THOMAS CRONIN ESQ.
NOLAN, BRUNERO, CRONIN & FERRARA LTD.
1070 MAIN STREET
COVENTRY, RI 02816-5707
PHONE: (401) 828-5800

DRAWING ISSUE:

- [ ] CONCEPT
- [ ] CUSTOMER APPROVAL
- [x] PERMITTING
- [ ] CONSTRUCTION
- [ ] AS-BUILT
- [ ] OTHER:

ONLY PLANS ISSUED FOR CONSTRUCTION SHALL BE USED FOR CONSTRUCTION

TIMOTHY J. BEHAN
No. 6278
REGISTERED PROFESSIONAL ENGINEER
04/21/2026

REVISIONS

No.	DATE	DRWN	CHKD
1	07-29-25	SMA	TJB
2	07-31-25	SMA	TJB
3	09-02-25	SMA	TJB
4	09-11-25	SMA	TJB
5	11-07-25	SMA	TJB
6	12-04-25	SMA	TJB
7	12-24-25	SMA	TJB
8	01-27-26	SMA	TJB
9	03-31-26	SMA	TJB
10	04-21-26	SMA	TJB

COMMONWEALTH
ENGINEERS & CONSULTANTS, INC.
400 SMITH STREET
PROVIDENCE, RHODE ISLAND 02908
(401) 273-6600

PRELIMINARY PLAN APPLICATION
COMPREHENSIVE PERMIT
FOR
SIENA CONDOMINIUMS
A.P. 45 LOTS 10, 11, 12 & 13
MAIN STREET
COVENTRY, RHODE ISLAND

CONSTRUCTION DETAILS-7

SCALE: AS SHOWN		SHEET NO: 19 OF 20
DRAWN BY: SMA	DESIGN BY: SMA	CHECKED BY: TJB
DATE: MARCH 27, 2025		PROJECT NO.: 25024.00

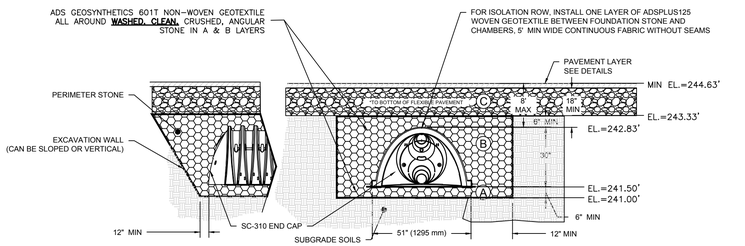

BMP-7: STORMTECH SC-310 ISOLATION CHAMBERS CROSS SECTION

NOT TO SCALE

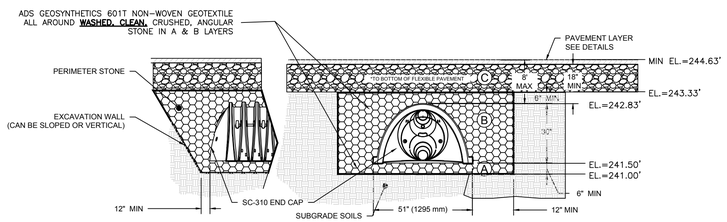

BMP-7: STORMTECH SC-310 INFILTRATION CHAMBERS CROSS SECTION

NOT TO SCALE

NOTE:
1. SYSTEM DIMENSION: 24.56(L)X 11.50(W)X 3.5'(H)
2. 3 ROWS OF 3 SC-310 CHAMBERS
3. 1-ROW INSTALLED AS AN ISOLATION ROW
4. 6" OF STONE BELOW THE CHAMBERS
5. 6" SPACING BETWEEN CHAMBERS
6. ESHGWT ELEV.=237.0±

BMP-7 WATER LEVELS

WQ=241.01'
1-YR=241.01'
10-YR=241.97'
25-YR=243.26'
100-YR=243.29'

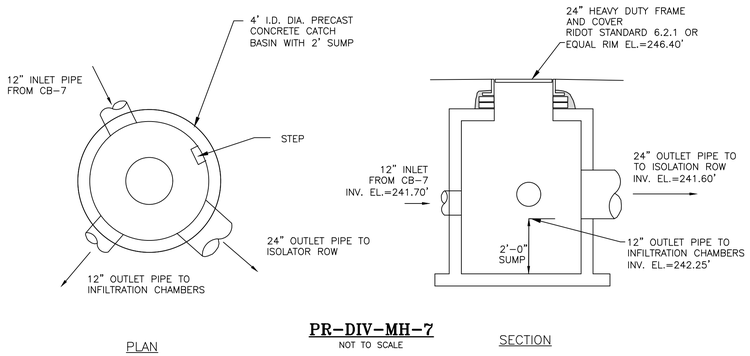

PR-DIV-MH-7

NOT TO SCALE

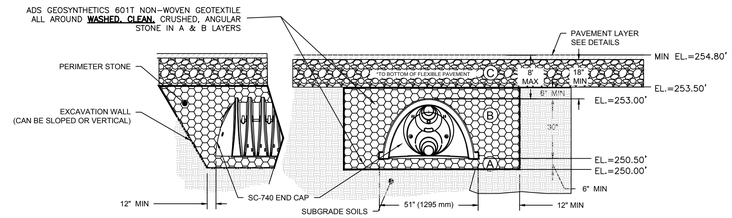

BMP-8A: STORMTECH SC-740 INFILTRATION CHAMBERS CROSS SECTION

NOT TO SCALE

NOTE:
1. SYSTEM FOR ROOF RUNOFF ONLY.
2. SYSTEM DIMENSION: 10.75(L)X 22.50(W)X 3.5'(H)
3. 1 ROWS OF 6 SC-740 CHAMBERS
4. 6" OF STONE BELOW THE CHAMBERS
5. 6" SPACING BETWEEN CHAMBERS
6. ESHGWT ELEV.=244.0±

BMP-8A WATER LEVELS

WQ=250.01'
1-YR=250.39'
10-YR=251.01'
25-YR=251.50'
100-YR=252.56'

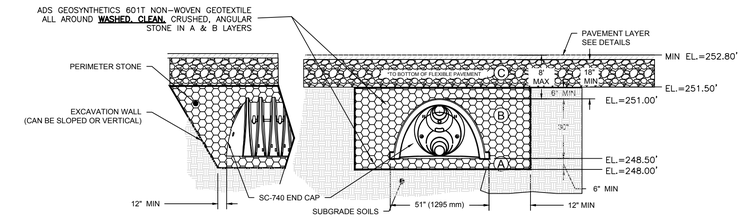

BMP-9A: STORMTECH SC-740 INFILTRATION CHAMBERS CROSS SECTION

NOT TO SCALE

NOTE:
1. SYSTEM FOR ROOF RUNOFF ONLY.
2. SYSTEM DIMENSION: 10.75(L)X 22.50(W)X 3.5'(H)
3. 1 ROWS OF 6 SC-740 CHAMBERS
4. 6" OF STONE BELOW THE CHAMBERS
5. 6" SPACING BETWEEN CHAMBERS
6. ESHGWT ELEV.=242.0±

BMP-9A WATER LEVELS

WQ=248.01'
1-YR=248.39'
10-YR=249.01'
25-YR=249.50'
100-YR=250.56'

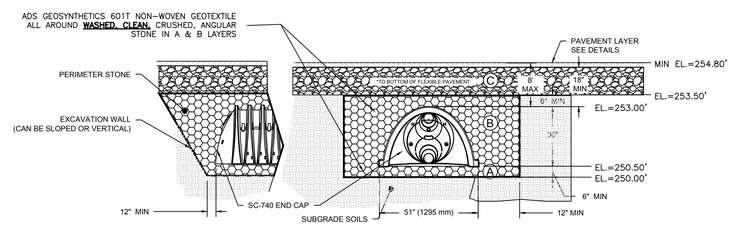

BMP-8B: STORMTECH SC-740 INFILTRATION CHAMBERS CROSS SECTION

NOT TO SCALE

NOTE:
1. SYSTEM FOR ROOF RUNOFF ONLY.
2. SYSTEM DIMENSION: 10.75(L)X 22.50(W)X 3.5'(H)
3. 1 ROWS OF 6 SC-740 CHAMBERS
4. 6" OF STONE BELOW THE CHAMBERS
5. 6" SPACING BETWEEN CHAMBERS
6. ESHGWT ELEV.=244.0±

BMP-8B WATER LEVELS

WQ=250.01'
1-YR=250.39'
10-YR=251.01'
25-YR=251.50'
100-YR=252.56'

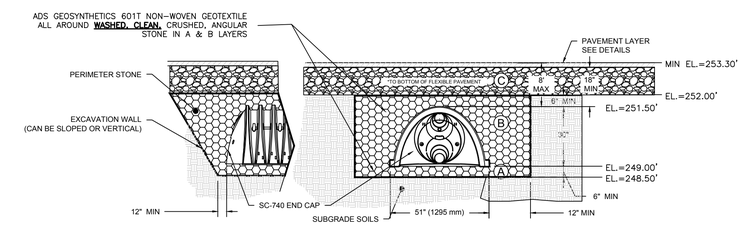

BMP-9B: STORMTECH SC-740 INFILTRATION CHAMBERS CROSS SECTION

NOT TO SCALE

NOTE:
1. SYSTEM FOR ROOF RUNOFF ONLY.
2. SYSTEM DIMENSION: 10.75(L)X 22.50(W)X 3.5'(H)
3. 1 ROWS OF 6 SC-740 CHAMBERS
4. 6" OF STONE BELOW THE CHAMBERS
5. 6" SPACING BETWEEN CHAMBERS
6. ESHGWT ELEV.=242.0±

BMP-9B WATER LEVELS

WQ=248.51'
1-YR=248.89'
10-YR=249.51'
25-YR=250.00'
100-YR=251.06'

OWNER/APPLICANT:
BOULDER HILL DEVELOPMENT, LLC
PATRICK CZERWIEN, MANAGER
57 PINE RIDGE DRIVE
CRANSTON, RI 02921
PHONE: (401) 413-5648

LEGAL COUNCIL:
MR. THOMAS CRONIN ESQ.
NOLAN, BRUNERO, CRONIN & FERRARA LTD.
1070 MAIN STREET
COVENTRY, RI 02816-5707
PHONE: (401) 828-5800

DRAWING ISSUE:

- [ ] CONCEPT
- [ ] CUSTOMER APPROVAL
- [x] PERMITTING
- [ ] CONSTRUCTION
- [ ] AS-BUILT
- [ ] OTHER:

ONLY PLANS ISSUED FOR CONSTRUCTION SHALL BE USED FOR CONSTRUCTION

TIMOTHY J. BEHAN
No. 6278
REGISTERED PROFESSIONAL ENGINEER
04/21/2026

REVISIONS

No.	DATE	DRWN	CHKD
1	07-29-25	SMA	TJB
2	07-31-25	SMA	TJB
3	09-02-25	SMA	TJB
4	09-11-25	SMA	TJB
5	11-07-25	SMA	TJB
6	12-04-25	SMA	TJB
7	12-24-25	SMA	TJB
8	01-27-26	SMA	TJB
9	03-31-26	SMA	TJB
10	04-21-26	SMA	TJB

COMMONWEALTH ENGINEERS & CONSULTANTS, INC.
400 SMITH STREET
PROVIDENCE, RHODE ISLAND 02908
(401) 273-6600

PRELIMINARY PLAN APPLICATION
COMPREHENSIVE PERMIT
FOR
SIENA CONDOMINIUMS
A.P. 45 LOTS 10, 11, 12 & 13
MAIN STREET
COVENTRY, RHODE ISLAND

CONSTRUCTION DETAILS-8

SCALE: AS SHOWN		SHEET NO: 20 OF 20
DRAWN BY: SMA	DESIGN BY: SMA	CHECKED BY: TJB
DATE: MARCH 27, 2025		PROJECT NO.: 25024.00

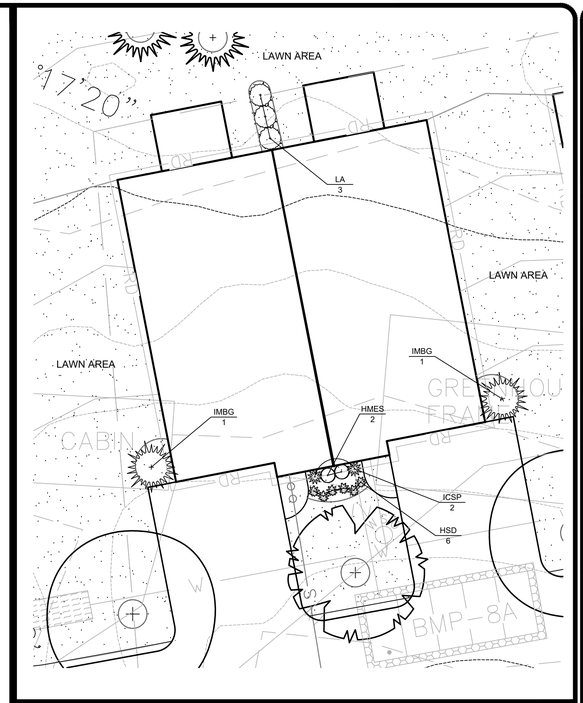

ENLARGED TYPICAL UNIT PLANTING DESIGN:

SCALE: 1"=10'-0"

PLANTING NOTES:

1. SEE SHEET L–2 FOR PLANTING DETAILS AND NOTES.

2. ALL PLANTING BEDS SHALL BE MULCHED WITH 3" SHREDDED BARK MULCH. SUBMIT SAMPLES TO OWNER PRIOR TO INSTALLATION.

3. IN CASES OF DISCREPANCY BETWEEN QUANTITIES SHOWN IN THE PLANTING SCHEDULE AND QUANTITIES INDICATED ON THE PLAN, QUANTITIES INDICATED ON THE PLAN SHALL GOVERN.

4. ALL COMPACTED SUBBASE SHALL BE SCARIFIED TO A MINIMUM OF 6" PRIOR TO INSTALLATION OF LOAM FOR FINE GRADING FOR ALL LAWN AREAS AND PLANTING BEDS.

5. THE CONTRACTOR SHALL COORDINATE ALL SITE UTILITY WORK WITH TREE AND PLANT LOCATION SHOWN ON THIS PLAN.

6. THE CONTRACTOR SHALL CONTACT AND NOTIFY DIG–SAFE PRIOR TO COMMENCEMENT OF PROJECT TO CONFIRM ALL EXISTING AND PROPOSED SITE UTILITY LOCATIONS.

7. ALL PROPOSED PLANTINGS SHALL BE INSTALLED AT GRADE ACCORDING TO THE PLANTING DETAILS. NO EXCESSIVE MOUNDING AND DEEP BURIAL OF TREES AND SHRUBS WILL BE ALLOWED, PLANT ACCORDING TO THE PLANTING DETAILS.

8. CONTENTS OF THIS PLAN REFLECT PLANTING DESIGN ONLY. SEE CIVIL AND ARCHITECTURAL SHEETS FOR ADDITIONAL INFORMATION.

OVERALL PLANTING SCHEDULE

TREES AND SHRUBS

Key	Botanical Name / Common Name	Qty.	Size	Notes
AFAB	Acer freemanii 'Autumn Blaze' / Autumn Blaze Red Maple	8	2.5"-3" Cal.	B&B
CCFP	Cercis canadensis 'Forest Pansy' / Forest Pansy Redbud	3	2"-2.5" Cal.	B&B
CJ	Cryptomeria japonica / Japanese Cedar	8	6'-7'	B&B
HMES	Hydrangea macrophylla 'Endless Summer' / Endless Summer Hydrangea	16	3 Gal.	Cont.
HSD	Hemerocallis 'Stella D'Oro' / Yellow Daylilly	48	1 Gal.	Cont.
ICS	Ilex crenata 'Sky Pencil' / Sky Pencil Holly	16	5 Gal.	Cont.
IMBG	Ilex meserveae 'Blue Girl' / Blue Girl Holly	3'-4'	16	B&B
JCBP	Juniperus conferta 'Blue Pacific' / Blue Pacific Juniper	5	3 Gal.	Cont.
LA	Ligustrum amurense / California privet	24	5 Gal.	Cont.
LS	Liquidambar styraciflua / Sweetgum	11	2.5"-3" Cal.	B&B
PIO	Prunus incam 'Okame' / Okame Flowering Cherry	5	2"-2.5" Cal.	B&B
PSK	Prunus serrulata 'Kwanzan' / Kwanzan Flowering Cherry	6	2"-2.5" Cal.	B&B
PS	Pinus strobus / White Pine	12	5'-6'	B&B
RKO	Rosa 'Red Knockout' / Red Double Knockout Rose	6	3 Gal.	Cont.
TPGG	Thuja plicata 'Green Giant' / Green Giant Arborvitae	41	5'-6'	B&B

SCALE IN FEET

0 15 30 60 120

SCALE : 1"=30'-0"

Not Issued For Construction

Revisions:	No.	Date:	Notes:

MDG

MUOIO DESIGN GROUP
~ Landscape Architecture ~
1075 Tiverton Avenue, Cranston, RI 02921
Ph (401) 941-9701 Fx (401) 944-9707 E-mail mdesigngroup@gmail.com

LANDSCAPE PLAN

Siena Condominiums

Assessor's Map 45, Lots 10, 11, 12 & 13 Main Street & Jurczyk
Coventry, Rhode Island

Job No: C-SienaCondos
Dwg. No: C-SiennaCondos_Base.dwg
Drawn by: BMM
Checked by: BMM
Issue Date: 12/04/25

PERMITTING DOCUMENTS

THIS DRAWING IS THE PROPERTY OF THE LANDSCAPE ARCHITECT ANY UNAUTHORIZED USE OF THIS DRAWING WITHOUT WRITTEN PERMISSION IS PROHIBITED

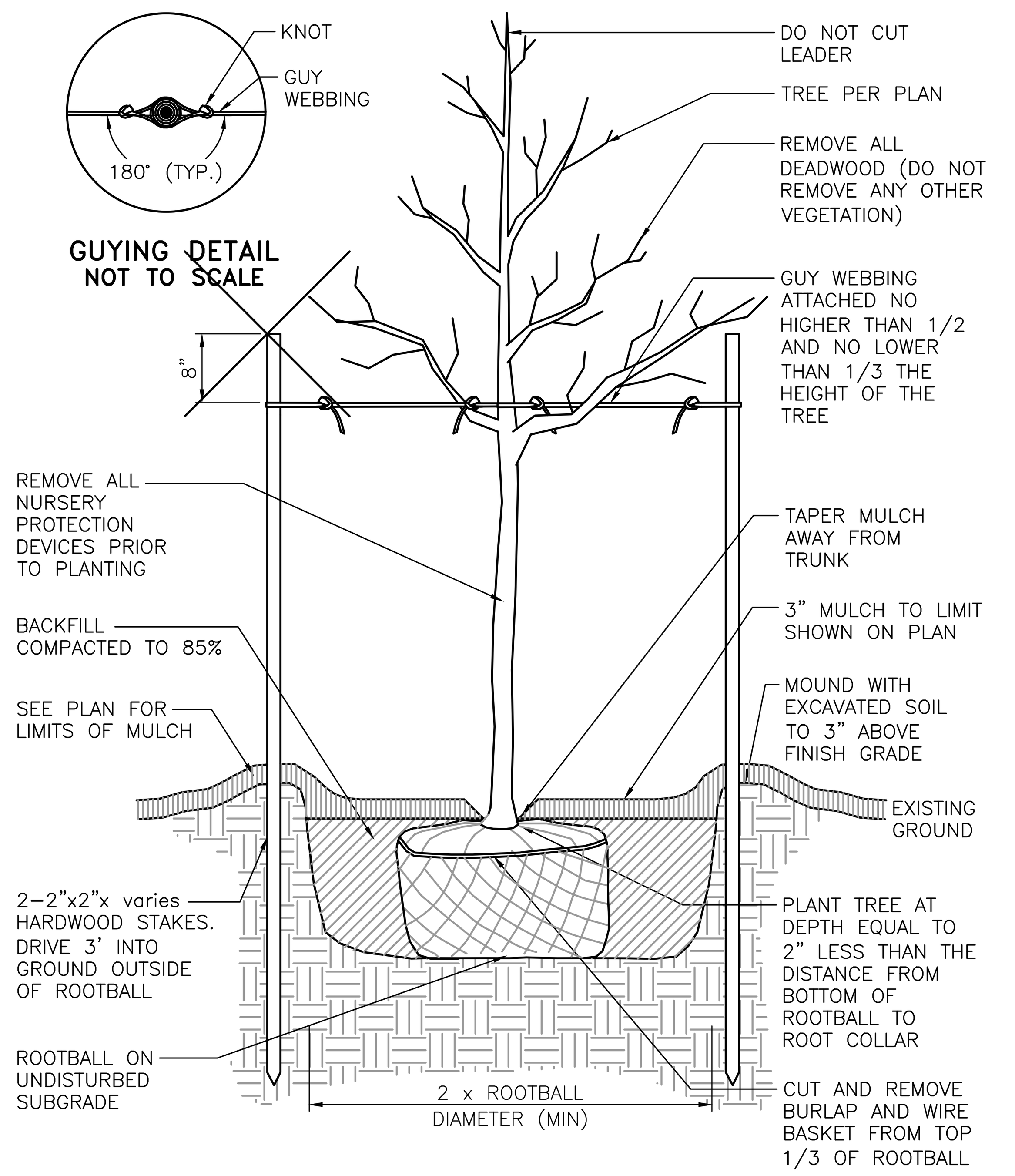

NOTE:
1. AFTER THE GUARANTEE PERIOD THE CONTRACTOR WILL BE RESPONSIBLE FOR THE REMOVAL OF STAKES AND GUY WEBBING.

DECIDUOUS TREE STAKING AND PLANTING DETAIL
NOT TO SCALE

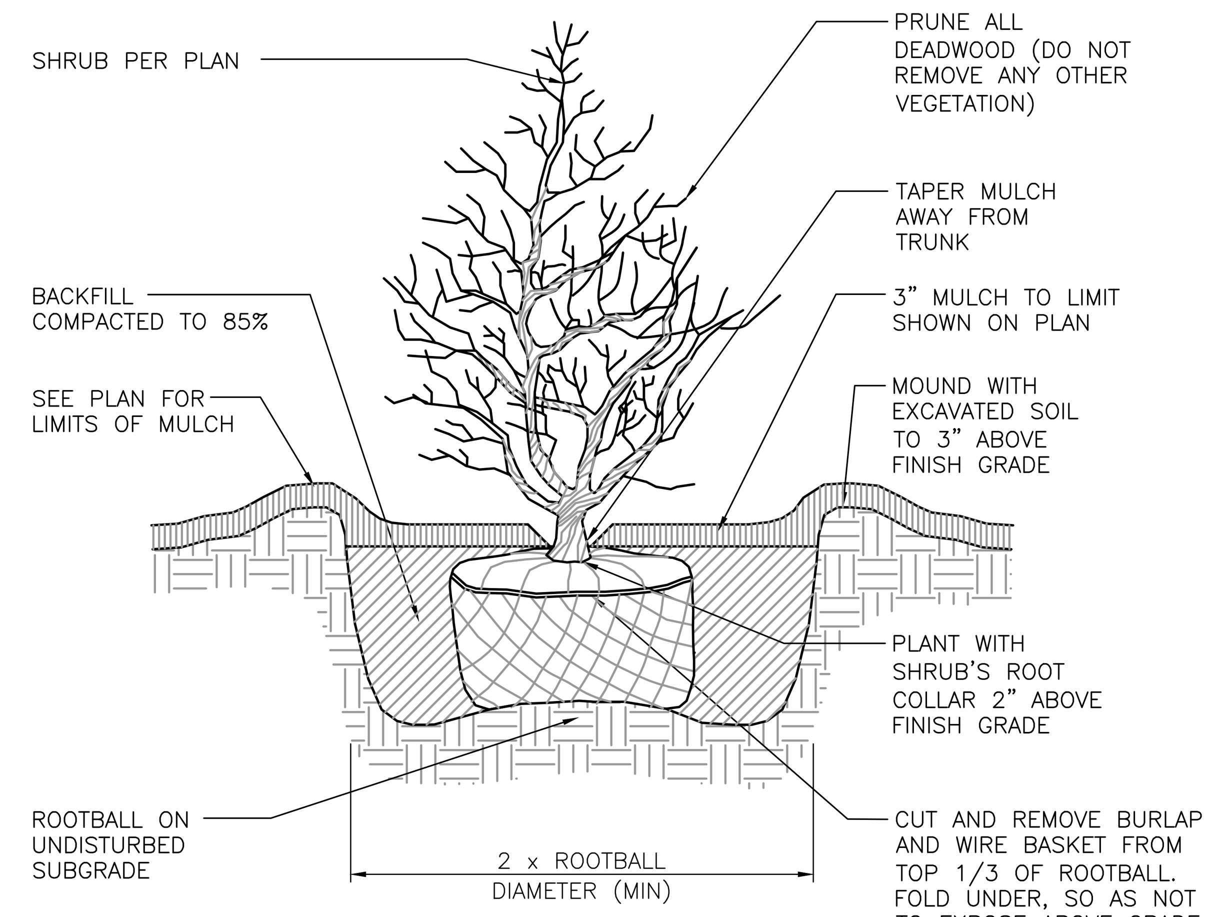

SHRUB PLANTING DETAIL
NOT TO SCALE

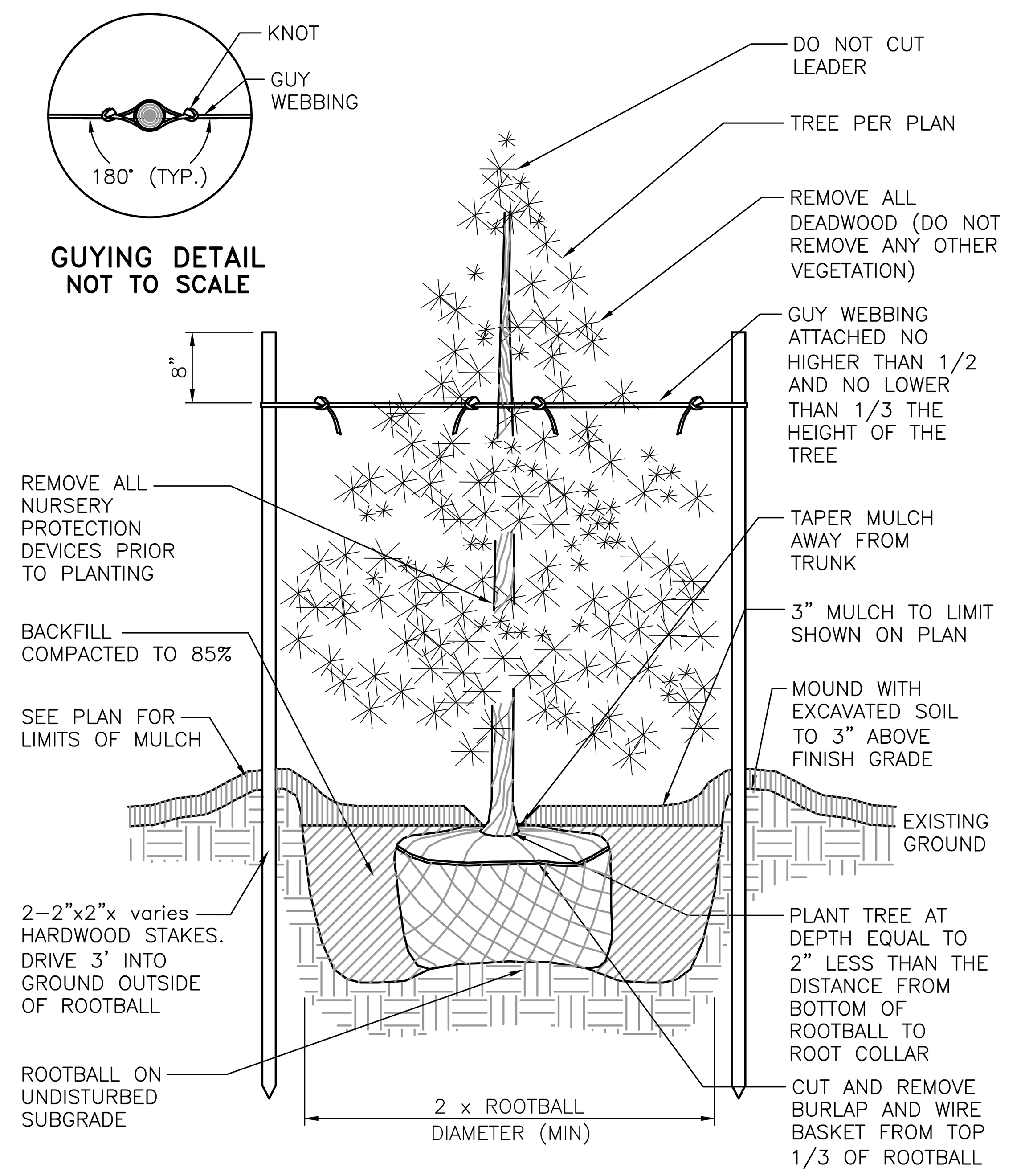

NOTE:
1. AFTER THE GUARANTEE PERIOD THE CONTRACTOR WILL BE RESPONSIBLE FOR THE REMOVAL OF STAKES AND GUY WEBBING.

EVERGREEN TREE PLANTING DETAIL
NOT TO SCALE

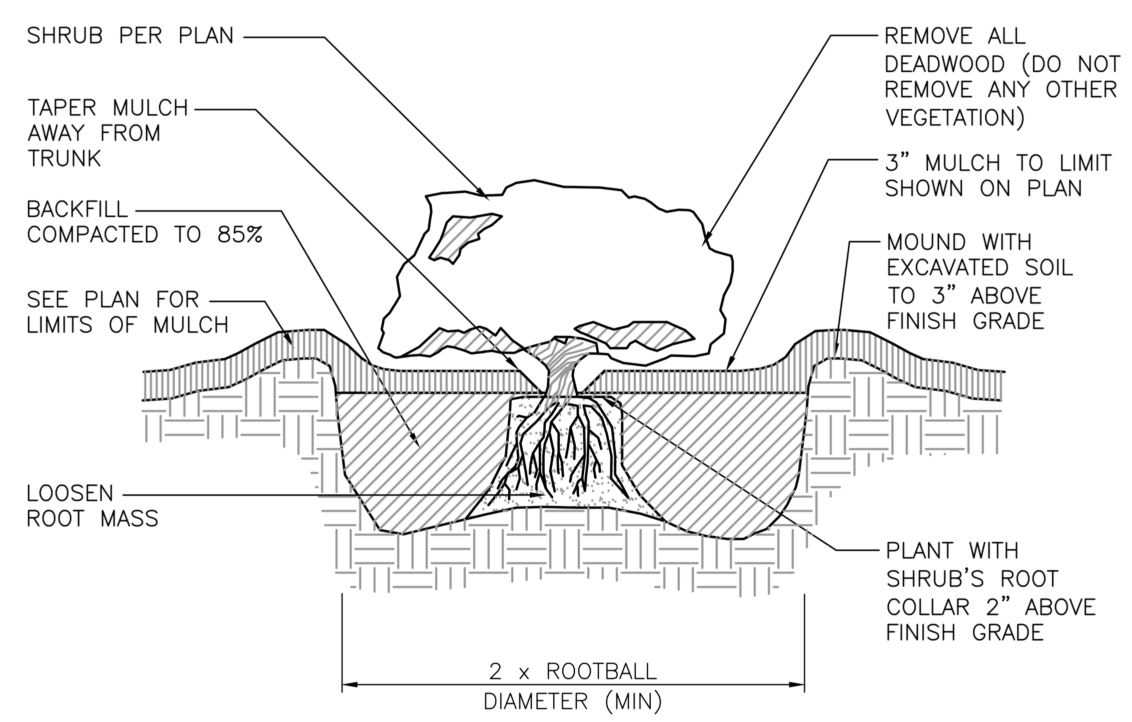

CONTAINER GROWN TREE AND SHRUB PLANTING DETAIL
NOT TO SCALE

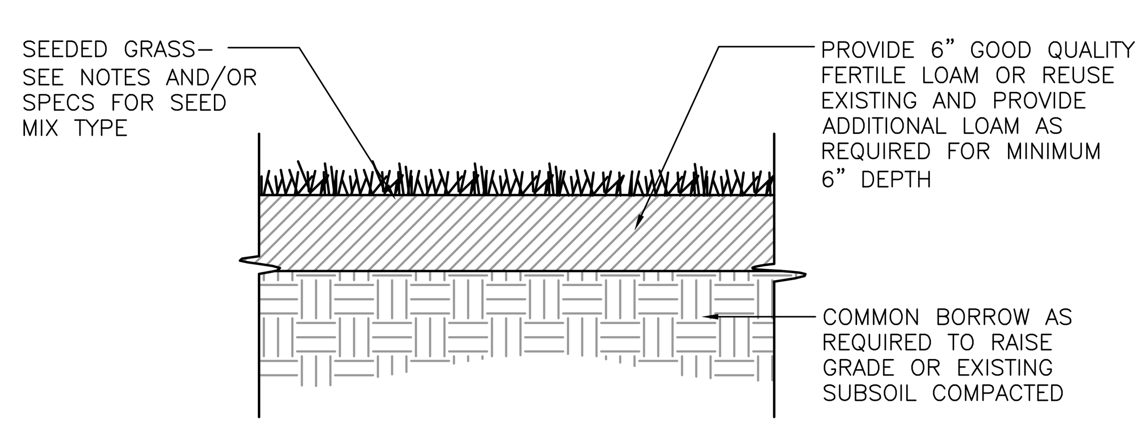

LOAM AND SEED DETAIL
NOT TO SCALE

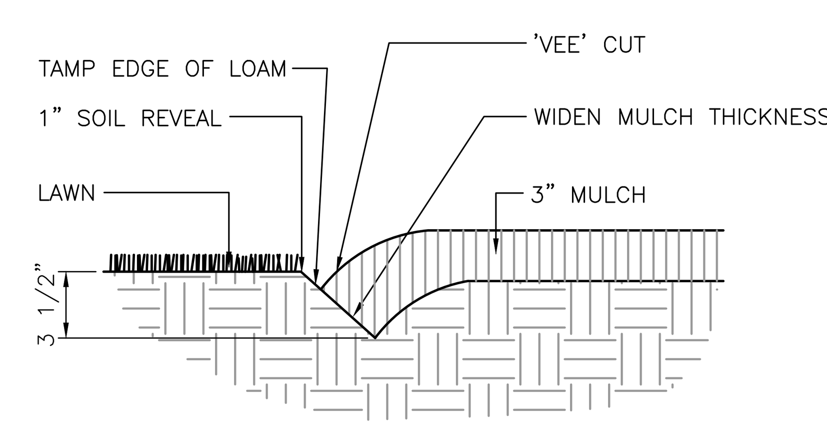

NOTE: LOCATE BEDLINE AS SHOWN ON PLAN.

BEDLINE EDGE DETAIL
NOT TO SCALE

PLANTING NOTES:

1. All plant material must be tagged in the ground, at the nursery by the Landscape Architect. All plant material shall be commercially obtained and shall meet the American Association of Nurseryman standards for nursery stock, latest edition, and its amendments. Plant only during season normal to the particular variety. All plant inspections will be at the expense of the contractor. Permanent seals will be required.
2. Cover all planting beds with 3" shredded hardwood bark mulch within a seventy-two hour period after planting. See plan for bed layout.
3. All existing and proposed trees shown in lawn areas shall receive a 4' diameter mulch bed. Mulch shall be placed to a depth of 3". Remove all sod, roots, sticks and stones prior to placement of mulch.
4. All plant materials furnished by the contractor shall be guaranteed for a period of one year from final acceptance of landscape work.
5. Stake all trees over 5' as shown on details. Remove stakes at the end of the guarantee period.
6. The contractor is responsible for keeping the site clean of miscellaneous debris throughout the construction period. All waste material is to be disposed of immediately to an off-site location, unless otherwise indicated on the plans.
7. The contractor shall perform all work in accordance with all local, state, and federal regulations, and shall obtain all necessary permits for this project.
8. Layout: All notes and dimensions are typical unless otherwise noted. All dimensions are square (parallel or perpendicular) unless otherwise noted. The contractor shall notify the owner/owner's representative immediately in the event of any discrepancies found in the contract documents and/or in the field, or of conditions uncovered in the work which are not reflected in the plans.
9. Loam: Loam moved during the course of construction shall be retained and distributed within the site in accordance with the landscape plan. Stockpiled loam shall not be mixed with any subsoil or unsuitable materials. All excess loam shall remain on the property of the owner. New loam if required to provide the specified depth, shall be a fertile, friable medium textured sandy loam free of material toxic to healthy plant growth. Loam shall also be free of all stumps, roots, stones and other extraneous matter an inch (1") or greater in diameter. The PH shall be between 5.5 and 7.5 when tested.
10. Lawn Preparation: Remove all debris and other inorganic materials on the prepared subgrade, reshape and dress any damaged or eroded area prior to spreading the loam. Scarify and loosen subgrade in any areas where compaction may have occurred. Spread stockpiled and off-site loam on all disturbed areas to produce a depth of 6". Fine grade loamed areas to produce a smooth and unbroken finish grade to the required depth. Apply a starter fertilizer (10-20-10) at a rate of 20 lbs. per 1000 square feet and lime at a rate of 40 lbs. per 1000 square feet. Once spread, the fertilizer and lime shall be thoroughly incorporated into the loam. The loam shall be rolled, and depression shall be top dressed and raked to create a smooth surface.
11. Seeding: Seeding shall take place between March 15 and May 31 or August 15 and October 15 only. Seed shall be pure, live, fresh seed from commercial sources meeting and labeled in accordance with State and Federal rules and regulations. The seed mixture shall be:

Proportion by Type	Weight	Pur.	Germ.
Palmer Perennial Ryegrass	20.0%	99%	90%
Ranger Perennial Ryegrass	20.0%	99%	90%
Baron Kentucky Bluegrass	30.0%	95%	85%
Merion Kentucky Bluegrass	30.0%	95%	85%
Inert Materials 2.5% (maximum)			

    Seeded areas shall, at a minimum, include all areas of the site that have been disturbed or are barren unless otherwise noted on the plans. Seed shall be applied at a rate of 7 lbs. per 1000 square feet.

12. Protection of Existing Plantings: Maximum effort should be made to save tree or other plant specimens which are large for their species, rare to the area, or of special horticultural or landscape value. Contact owner/landscape architect before removing any specimen of this type unless otherwise noted on the plans. No material or temporary soil deposits shall be placed within the drip line of shrubs or trees designated on the landscape plan to be retained. Protective barriers are to be installed around each plant and/or group of plants that are to remain on the site. Barriers shall not be supported by the plants they are protecting, but shall be self supporting. They shall be of minimum of four feet (4') high and constructed of a durable material, such as snow or silt fence, that will last until construction is completed.
13. Pruning: The contractor shall carefully prune branches in the way of construction by using only approved methods and tools. The use of axes for trimming or spurs for climbing will not be permitted.
14. Existing Utilities: In accordance with Dig-Safe law (1-800-225-4977), the contractor shall contact all applicable utility companies and verify utility line locations. The contractor shall be solely responsible for any/all utility damage. Record locations of Dig-Safe utility line markings on project record documents.
15. Disturbed Areas: Any areas disturbed during the course of construction are to be restored to original (or better) condition by contractor before completion of the project, and are subject to approval by landscape architect and owner. All grass areas disturbed during construction shall be york raked to remove stones and loamed and seeded as per specifications.
16. Drainage Systems: Contractor is responsible for general clean-out of all catch basins, manholes, and/or other drainage features on the site which have accumulated sediment as a result of construction activities.
17. Cleaning: Contractor is responsible for keeping site clean of miscellaneous debris throughout the construction period. All waste material is to be disposed of immediately to an off-site location, unless otherwise indicated on the plan.

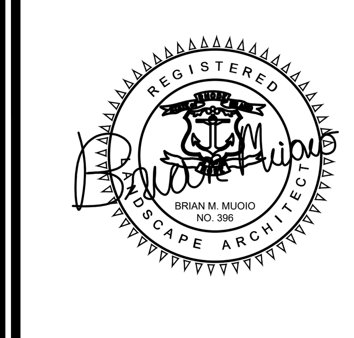

Not Issued For Construction

Revisions:	No.	Date:	Notes:

MDG
MUOIO DESIGN GROUP
~ Landscape Architecture ~
1075 Scituate Avenue, Cranston, RI 02921
Ph (401) 487-9552 Fx (401) 946-8590 Email: mdesigngroup@gmail.com

LANDSCAPE DETAILS PLAN

Siena Condominiums

Assessor's Map 45, Lots 10, 11, 12 & 13 Main Street & Jurczyk
Coventry, Rhode Island

Job No: C-SienaCondos
Dwg. No: C-SiennaCondos_Base.dwg
Drawn by: BMM
Checked by: BMM
Issue Date: 12/04/25

PERMITTING DOCUMENTS

THIS DRAWING IS THE PROPERTY OF THE LANDSCAPE ARCHITECT ANY UNAUTHORIZED USE OF THIS DRAWING WITHOUT WRITTEN PERMISSION IS PROHIBITED

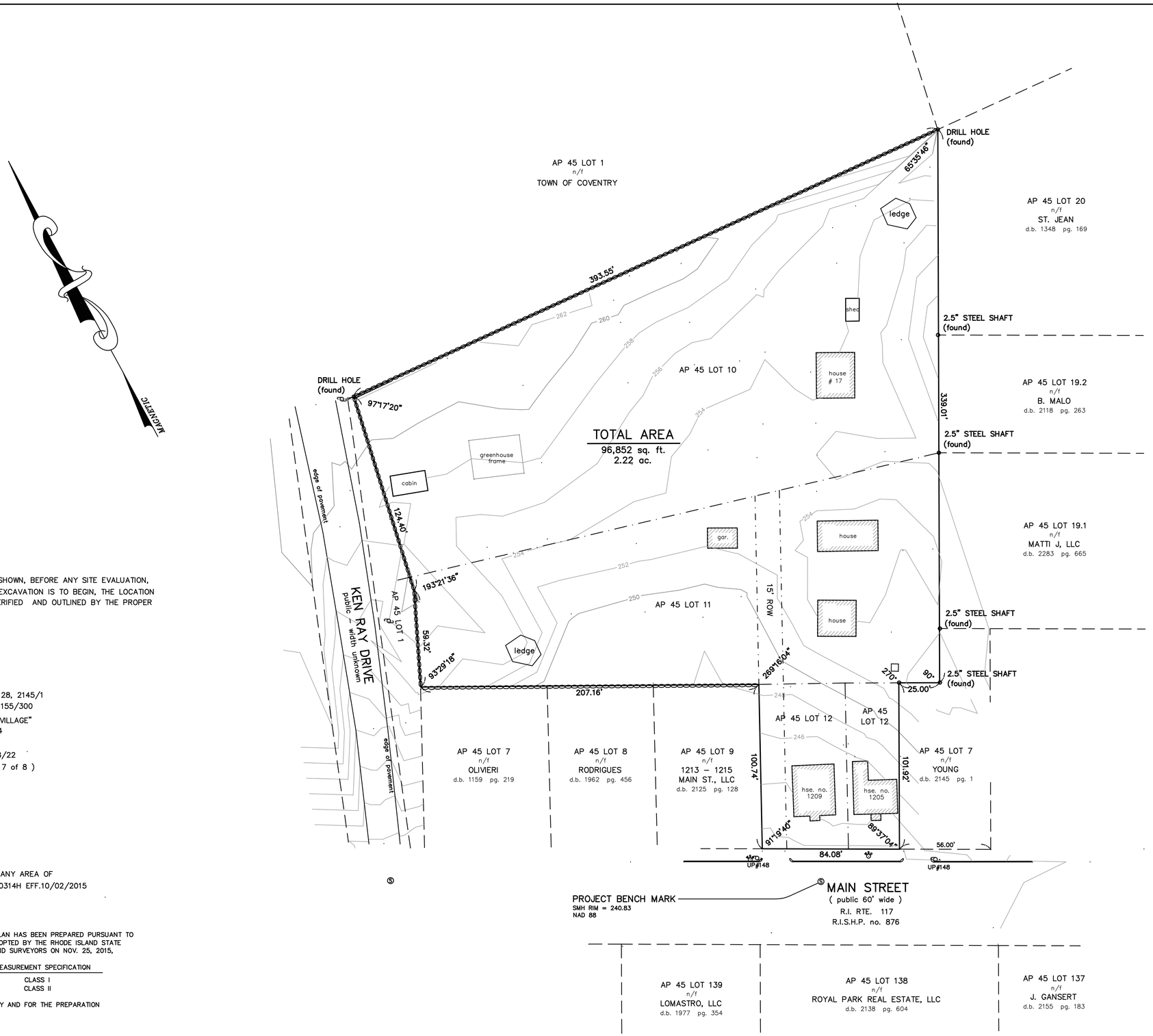

PREPARED FOR:
UNIVERSAL REALTY, LLC
58 PINE RIDGE DRIVE
CRANSTON, R.I.
02910

UTILITY NOTE:

UNDERGROUND UTILITIES HAVE NOT BEEN SHOWN, BEFORE ANY SITE EVALUATION, PREPARATION OF DESIGN DOCUMENTS OR EXCAVATION IS TO BEGIN, THE LOCATION OF UNDERGROUND UTILITIES SHOULD BE VERIFIED AND OUTLINED BY THE PROPER UTILITY COMPANY OR AGENCY

REFERENCES:

1.) COVENTRY ASSESSORS PLAT NO. 45
2.) COVENTRY DEED BOOK / PAGE;
1793/631, 141/721, 849/86, 2124/128, 2145/1
2283/665, 2118/263, 1348/169 & 1155/300
3.) "SELLING PLAN OF WASHINGTON MILL VILLAGE"
BY R. C. MATTESON – AUGUST 1934
4.) "THE KEN RAY DRIVE PLAT"
BY SARDELLI SURVEY, LLC – 11/28/22
5.) R.I.STATE HIGHWAY PLAT 876 (page 7 of 8)

ZONING CLASSIFICATION:

VILLAGE MAIN STREET COMMERCIAL

FLOOD DATA:

ENTIRE PARCEL AREA IS NOT LOCATED IN ANY AREA OF FLOODING ON FEMA FLOOD PANEL 44007C0314H EFF.10/02/2015

SURVEY CERTIFICATION:

THIS SURVEY HAS BEEN CONDUCTED AND THE PLAN HAS BEEN PREPARED PURSUANT TO SECTION 9 OF THE RULES AND REGULATIONS ADOPTED BY THE RHODE ISLAND STATE BOARD OF REGISTRATION FOR PROFESSIONAL LAND SURVEYORS ON NOV. 25, 2015, AS FOLLOWS:

TYPE OF SURVEY:	MEASUREMENT SPECIFICATION
COMPREHENSIVE BOUNDARY SURVEY	CLASS I
DATA ACCUMULATION – PLANIMETRIC	CLASS II

THE PURPOSE FOR THE CONDUCT OF THE SURVEY AND FOR THE PREPARATION OF THE PLAN IS AS FOLLOWS:

PERFORM A PROPERTY SURVEY AND PLAN

PETER V. CIPOLLA, JR.
No. 1680
PROFESSIONAL LAND SURVEYOR

BY: *Peter V. Cipolla, Jr.*
PETER V. CIPOLLA, JR. – RIPLS # 1680
COA # LS-A64

GRAPHIC SCALE
30 0 15 30 60 120
(IN FEET)
1 inch = 30 ft.

SURVEY PLOT PLAN
AP 45 LOTS 10, 11, 12 & 13
COVENTRY, R.I.

1" = 30' APR. 28, 2025

PETER V. CIPOLLA, JR
registered land surveyor
P. O. BOX 8662
CRANSTON, R.I. – 02920